ELECTRICAL SCHEME:

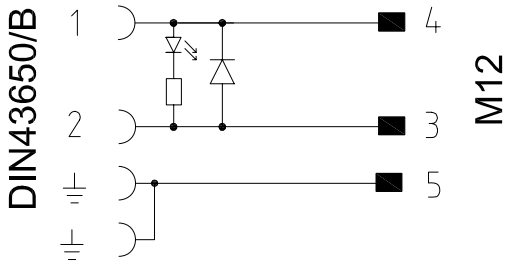

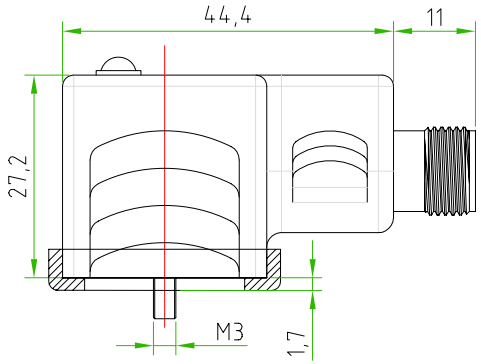

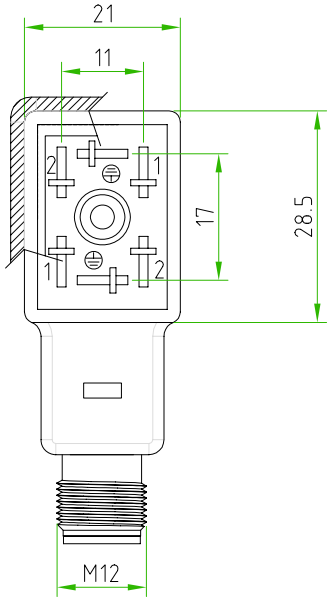

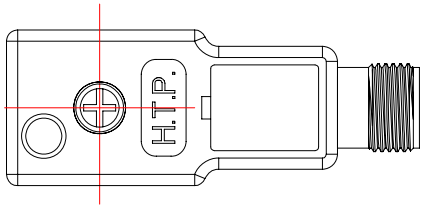

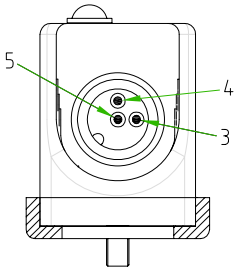

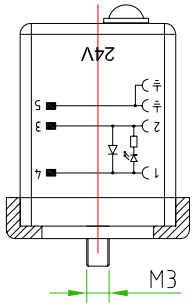

CONNECTOR FEATURES	PRODUCT TYPE	ADAPTER DIN43650/B+M12
DIN43650/B	HOUSING COLOUR	BLACK
	CONTACT SPACING	11mm
	NUMBER OF POLES	2POLES+EARTH
	EARTH POSITIONING H.	6/12
	FIXING SCREW	M3X28,7
	PROFILED GASKET	NBR
	CIRCUIT TYPE	WITH RED LED+DIODE
	VOLTAGE	24V DC
	CONNECTOR WITH H.T.P. LOGO	
M12	TYPE CONTACT	MALE
	NUMBER OF CONTACTS	N°3
	NUMBER OF CONTACTS CONNECTED	N°3

TOLLERANZE ±0.3	DISEGNATORE LORENZO CIMMINO	DATA 12-03-13	SCALA 1:1		PESO
U.d.M / ANGOLO	CONTROLLATO				
DESCRIZIONE: ADAPTER DIN43650/B 2P+E.,EARTH H6/12, CONTACT SPACING 11mm, WITH RED LED+DIODE,24V.,2POLES+EARTH+M12 180° MALE 3P. CONNECTOR WITH H.T.P.LOGO		TIPO: DIN+M12			MATERIALE
H.T.P. HIGH TECH PRODUCTS		CODICE: M1N02DL1C-12MD			