

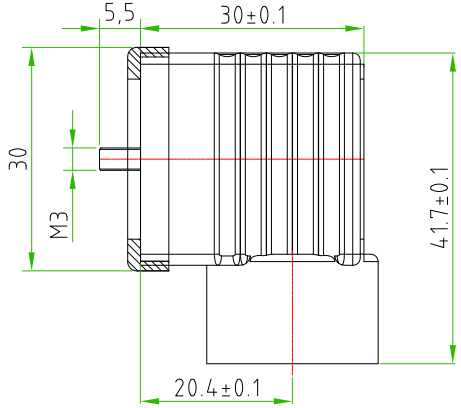

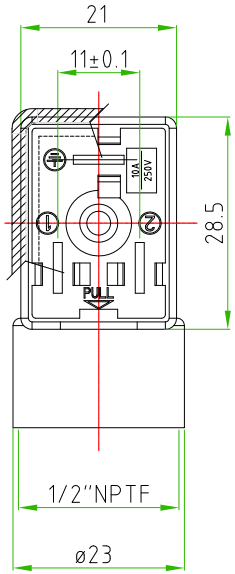

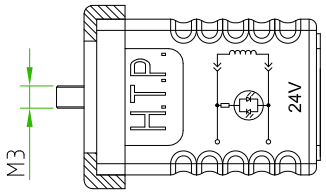

CONNECTOR FEATURES		
	PRODUCT TYPE	INDUSTRIAL STANDARD FORM B FIELD ATTACHABLE.
	HOUSING MATERIAL/COLOUR	PA66 /TRANSPARENT
	PRESS-CABLE MATERIAL/COLOUR	PA66 /BLACK
	INTRENAL CORE MATERIAL/COLOUR	PA66 /BLACK
	HEIGHT HOUSING	30mm
	CONTACTS SPACING	11mm
	CONTACTS TYPE	SCREW CONTACTS(with protection plate)
	NUMBER OF POLES	2POLES+EARTH
	EARTH POSITIONING	H.12 (TURNABLE)
	CABLE EXIT	1/2" NPTF
	SUITABLE CABLE	FROM ø4mm TO ø8mm
	MAX.CONDUCTOR SIZE	1,5mm^2
	PROTECTION CLASS	IP67
	CIRCUIT TYPE	BIPOLAR RED LED
	RATED VOLTAGE	24V AC/DC
	CONNECTOR TEMPERATURE RANGE	from -40°C to +90°C
	GASKET TYPE	PROFILED NBR
	FIXING SCREW	M3X0,5 L=32,5mm
	CONNECTOR WITH H.T.P. LOGO	

TOLLERANZE ±0.2		DISEGNATORE LORENZO CIMMINO	DATA 18-12-2018	SCALA 1 : 1		PESO
U.d.M	ANGOLO	CONTROLLATO ROBEROT SUGLIANI				
DESCRIZIONE CONNECTOR DIN43650/B,M1 SERIES,CONTACT SPACING,11mm,2P+E, BLACK HOUSING,WITH BIPOLAR RED LED,1/2NPTF. CONNECTOR WITH H.T.P.LOGO			TIPO M1			MATERIALE
H.T.P. HIGH TECH PRODUCTS			CODICE M1TF2L01			