Rev.	Modify	Date	Firma	Approved

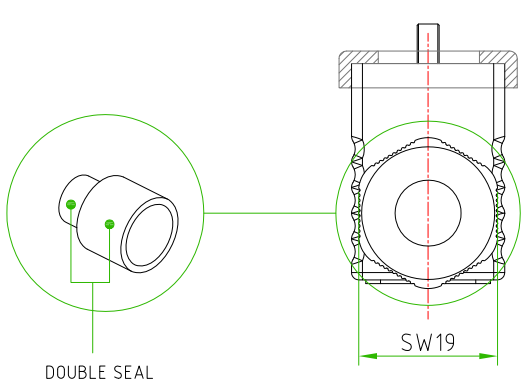

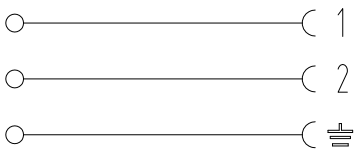

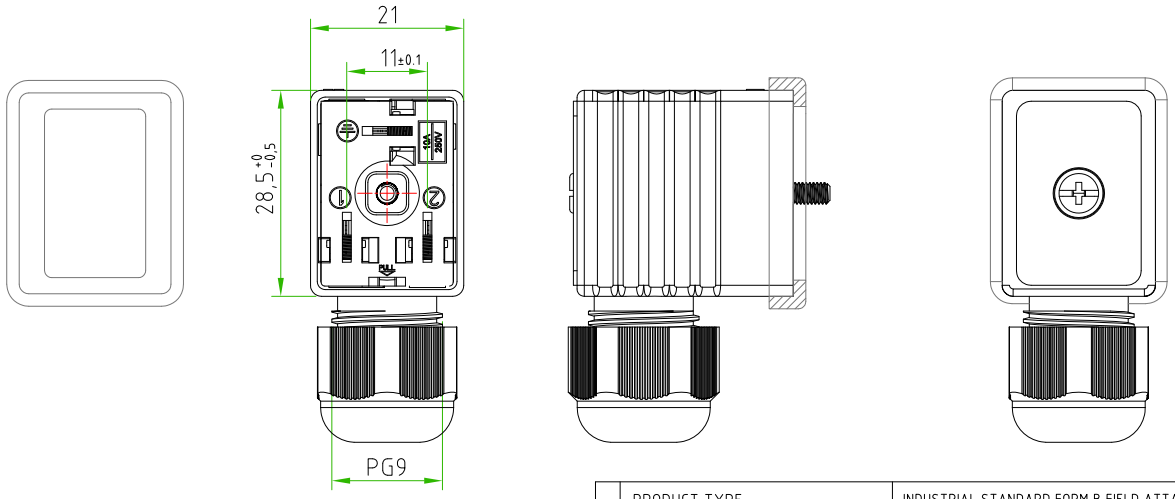

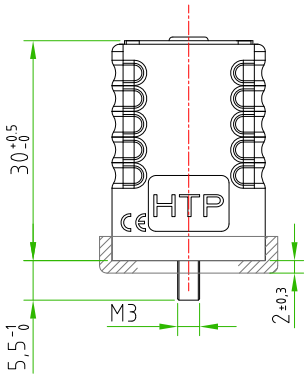

CONNECTOR FEATURES	
PRODUCT TYPE	INDUSTRIAL STANDARD FORM B FIELD ATTACHABLE.
HOUSING MATERIAL/COLOUR	PA66 /BLACK
PRESS-CABLE MATERIAL/COLOUR	PA66 /BLACK
INTRENAL CORE MATERIAL/COLOUR	PA66 /BLACK
HEIGHT HOUSING	30mm
CONTACTS SPACING	11mm
CONTACTS TYPE	SCREW CONTACTS(with protection plate)
NUMBER OF POLES	2POLES+EARTH
EARTH POSITIONING	H.12 (TURNABLE)
CABLE EXIT	SK SYSTEM (SW19) (DOUBLE SEAL)
SUITABLE CABLE	FROM ø4mm TO ø8,6mm
MAX.CONDUCTOR SIZE	1,5mm²
PROTECTION CLASS	IP67
CIRCUIT TYPE	WITHOUT ELECTRONIC
RATED VOLTAGE	250V AC/300V DC
CONNECTOR TEMPERATURE RANGE	from -40°C to +90°C
GASKET TYPE	PROFILED NBR
FIXING SCREW	M3X0,5 L=32,5mm
CONNECTOR WITH H.T.P. LOGO	

CUSTOMER APPROVAL	
SIGNATURE	DATE
PLEASE SIGN AND RETURN	

Rev.	Modify	Date	Signed	Approved

A4

Designer	SUGLIANI R.	Date	2020-11-05	Tollerance ±0,3	Units: mm	Series INDUSTRIAL STANDARD (form B)	Drawing n. 1/1
Approved	CIMMINO L.	Date	2020-11-05	Scale 1:1	Size: A4	Customer code:	

HTP™ High Tech Products S.R.L.

DESCRIPTION

RECTANGULAR CONNECTOR INDUSTRIAL STANDARD FORM B,FIELD ATTACHABLE, 2P.+PE, WITHOUT ELECTRONIC, 250V AC/300V DC, BLACK HOUSING, SK SYSTEM CONNECTOR WITH H.T.P. LOGO.

H.T.P.PART NUMBER

M1NS2000-SK

H.T.P. High Tech Products S.R.L. Via Lesina,45 -24030- Brembate di Sopra (Bg) - ITALY Phone:+39.035692509 Fax:+39.035203291 E-mail: info@webhtp.eu Web: http://www.webhtp.eu/

ALL RIGHTS ARE RESERVED.