Rev.	Modify	Date	Firma	Approved

Rev.	Modify	Date	Firma	Approved

Rev.	Modify	Date	Signed	Approved
01	-	2020.01.30	SUGLIANI	CIMMINO

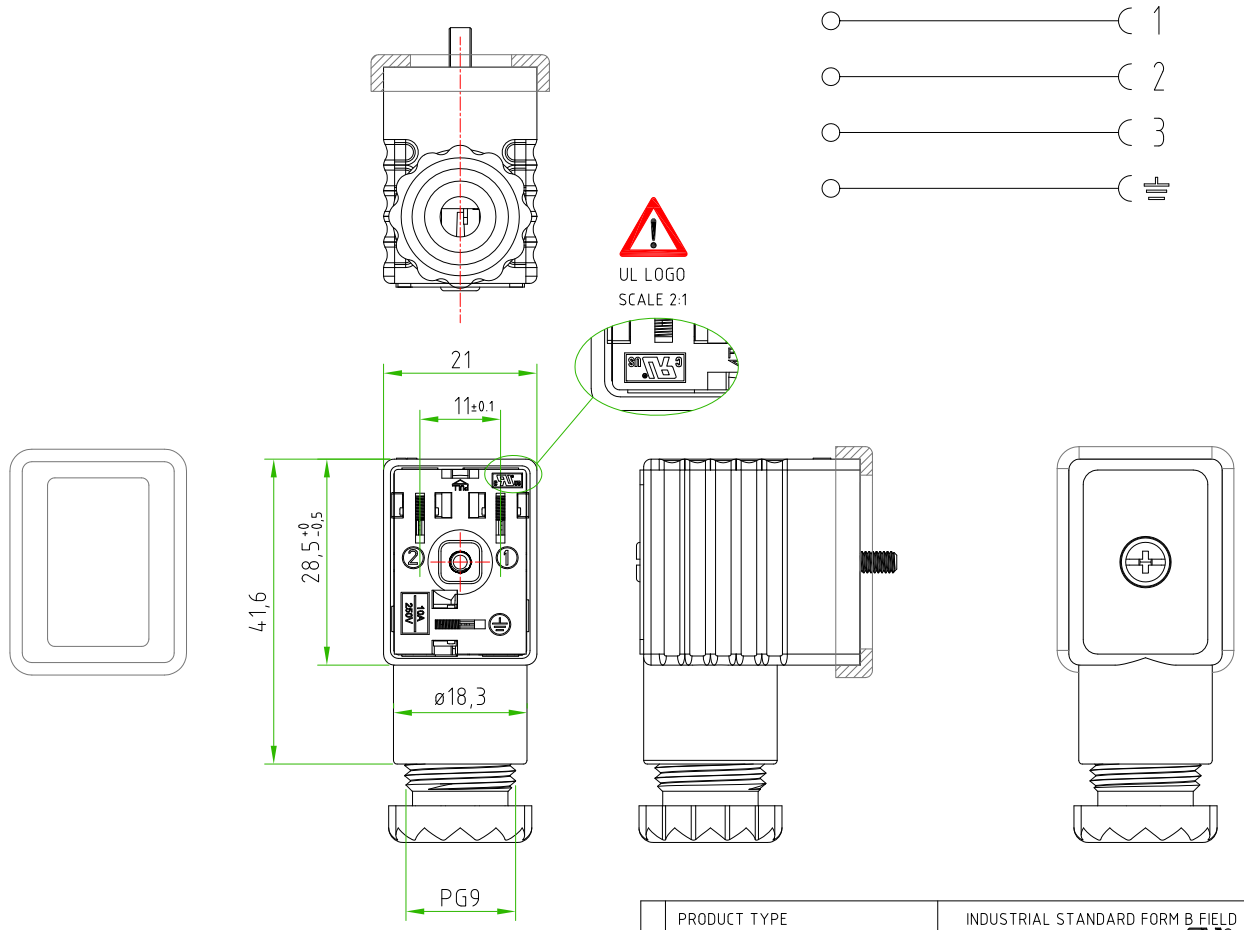

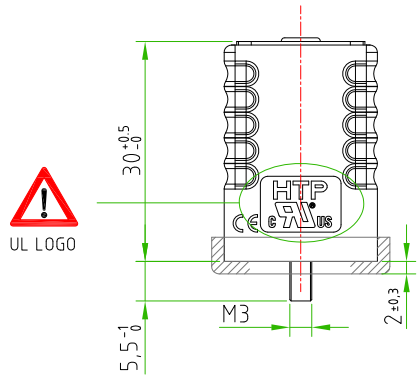

CONNECTOR FEATURES		
	PRODUCT TYPE	INDUSTRIAL STANDARD FORM B FIELD ATTACHABLE. UL APPROVED
	UL NUMBER CERTIFICATE	E333724
	HOUSING MATERIAL/COLOUR	PA66-BASFC3U /BLACK
	PRESS-CABLE MATERIAL/COLOUR	PA66-BASFC3U /BLACK
	INTERNAL CORE MATERIAL/COLOUR	PA66-BASFC3U /BLACK
	HEIGHT HOUSING	30mm
	CONTACTS SPACING	11mm
	CONTACTS TYPE	SCREW CONTACTS(with protection plate)
	NUMBER OF POLES	2POLES+EARTH
	EARTH POSITIONING	H.6 (TURNABLE)
	CABLE EXIT	PG9
	SUITABLE CABLE	FROM ø4mm TO ø10mm
	MAX.CONDUCTOR SIZE	1,5mm²
	PROTECTION CLASS	IP67
	CIRCUIT TYPE	WITHOUT ELECTRONIC
	RATED VOLTAGE	250V AC/300V DC
	CONNECTOR TEMPERATURE RANGE	from -40°C to +90°C
	GASKET TYPE	PROFILED NBR
	FIXING SCREW	M3X0,5 L=32,5mm
	CONNECTOR WITH H.T.P. LOGO	

-H6: MEANS EARTH POLE POSITIONING H.6

CUSTOMER APPROVAL	
SIGNATURE	DATE

PLEASE SIGN AND RETURN

A4

Designer	CIMMINO L.	Date	2019-12-06	Tollerance	±0,3	Units:	mm	Series	EN175301-803 (form C)	Drawing n.
Approved	SUGLIANI R.	Date	2019-12-06	Scale	1:1	Size:	A4	Customer code:		1-2

HTP High Tech Products S.R.L.

DESCRIPTION

SQUARE CONNECTOR INDUSTRIAL STANDARD FORM B,FIELD ATTACHABLE, 2P.+PE(H.6),WITH UL/CSA MARKING WITHOUT ELECTRONIC,250VAC/300VDC, BLACK HOUSING, PG9 unified. CONNECTOR WITH H.T.P. and LOGO.

H.T.P.PART NUMBER

M1NS2000-H6-UL90

H.T.P. High Tech Products S.R.L. Via Lesina,45 -24030- Brembate di Sopra (Bg) - ITALY Phone:+39.035692509 Fax:+39.035203291 E-mail: info@webhtp.eu Web: http://www.webhtp.eu/

ALL RIGHTS ARE RESERVED.

Rev.	Modify	Date	Firma	Approved

Rev.	Modify	Date	Firma	Approved

Rev.	Modify	Date	Signed	Approved
01	-	2020.01.30	SUGLIANI	CIMMINO

REV.01

PACKAGING:

INSERT N°50 PCS IN A LITTLE CARTON BOX.

INSERT N°10 LITTLE CARTON BOXES IN A BIG BOX 36,1x25x40CM

ON EACH CARTON BOX (INTERNAL/EXTERNAL) MUST BE APPLIED THE UL LABLE

UL LABEL

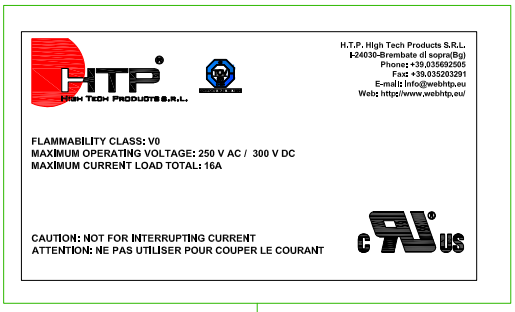

BOXES FEATURES

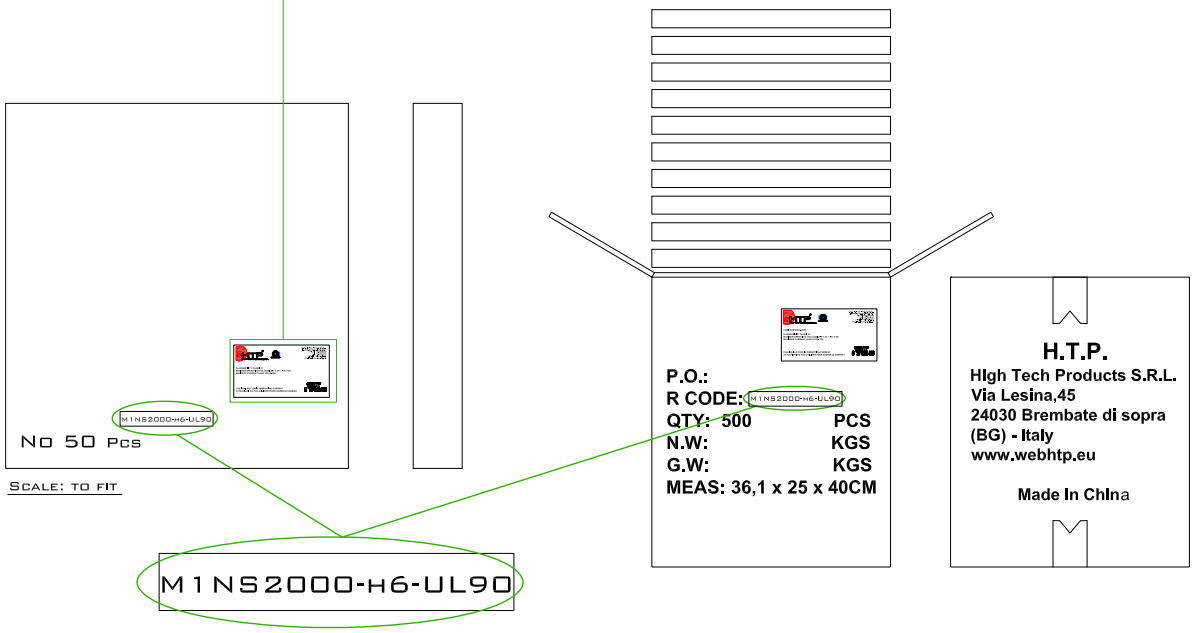

Designer	CIMMINO L.	Date	2019-12-06	Tollerance	±0,3	Units:	mm	Series	EN175301-803 (form C)	Drawing n.
Approved	SUGLIANI R.	Date	2019-12-06	Scale	1:1	Size:	A4	Customer code:		2-2

A4

DESCRIPTION

SQUARE CONNECTOR INDUSTRIAL STANDARD FORM B,FIELD ATTACHABLE, 2P.+PE(H.6),WITH UL/CSA MARKING WITHOUT ELECTRONIC,250VAC/300VDC, BLACK HOUSING, PG9 unified. CONNECTOR WITH H.T.P. and c UL us LOGO.

H.T.P.PART NUMBER

M1NS2000-H6-UL90

ALL RIGHTS ARE RESERVED.