

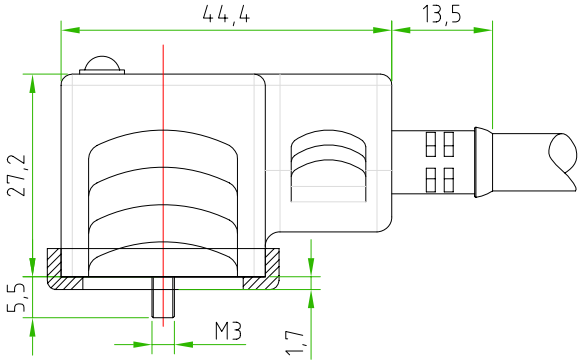

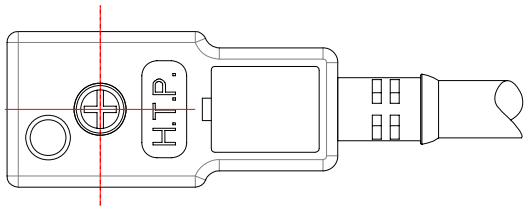

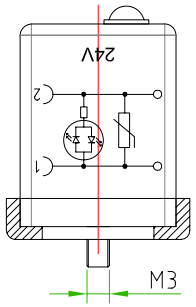

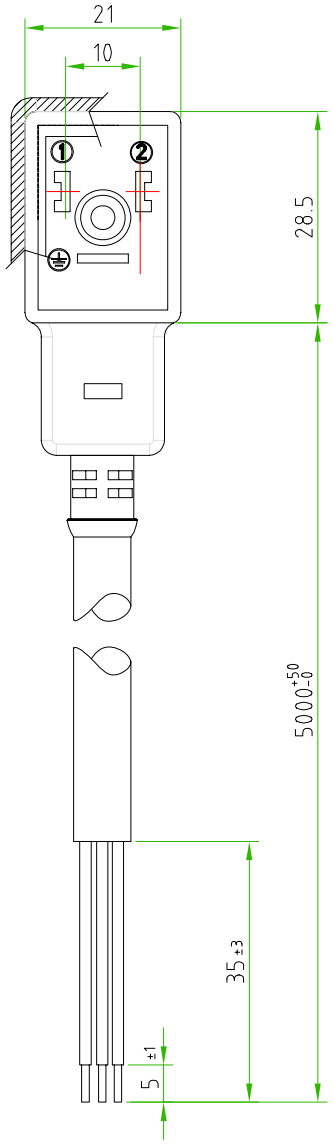

CONNECTOR FEATURES	PRODUCT TYPE	CM2 SERIES
	HOUSING COLOUR	BLACK
	CONTACT TYPE	2POLES+EARTH
	CONTACT SPACING	10mm
	CABLE LENGHT	5000mm
	PROTECTION CLASS	IP67
	STRIPPING	35mm STANDARD
	PEELING AND TINNING	5mm STANDARD
	FIXING SCREW	M3X28.7
	PROFILED GASKET	NBR
	EARTH POSITION H	6
	VOLTAGE	24V AC/DC
	CONNECTOR WITH RED LED+ VARISTOR	
	CONNECTOR WITH H.T.P.LOGO	
CABLE FEATURES	H.T.P. CABLE CODE	03
	NUMBER OF CONDUCTORS	N°3
	CONDUCTOR SECTION	0.75mm^2
	CABLE MATERIAL	PVC CEI2022IOR
	CABLE COLOUR	GREY RAL7032
	CONDUCTOR INSULATION MATERIAL	PVC

TOLLERANZE ±0.3	DISEGNATORE LORENZO CIMMINO	DATA 06-09-12	SCALA 1 : 1		DISEGNO N.
U.d.M / ANGOLO	CONTROLLATO				
DESCRIZIONE: DIN43650/B,M2 SERIES,2POLES+EARTH,EARTH H.6,WITH RED LED +VARISTOR,24V,CABLE PVC/PVC CEI2022IIOR,3X0,75mm^2,GREY,L=5m			TIPO: CM2		MATERIALE
H.T.P. HIGH TECH PRODUCTS			CODICE: CM2N02VL1A035		