

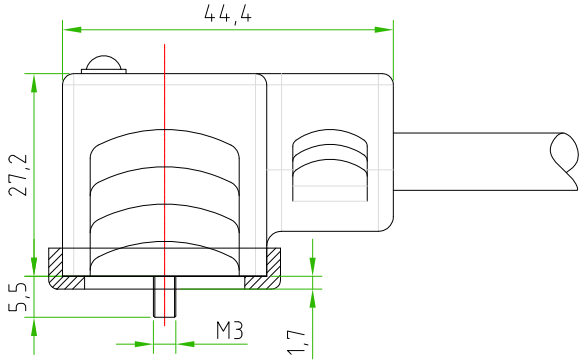

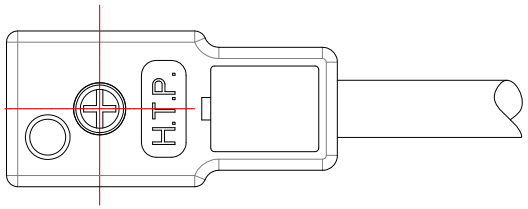

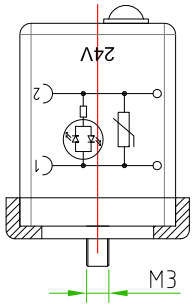

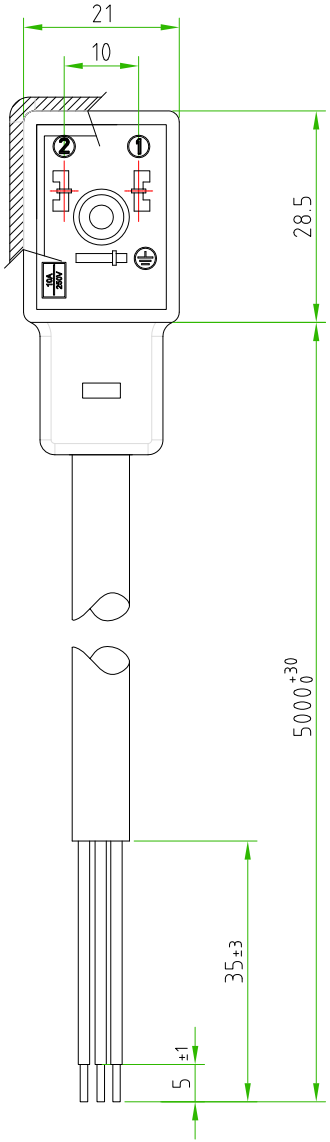

CONNECTOR FEATURES	PRODUCT TYPE	RECTANGULAR CONNECTOR EN175301-803(TYPE B)
	CONNECTOR COLOUR	BLACK
	CONTACTS SPACING	10mm
	NUMBER OF CONTACTS	2POLES+EARTH
	EARTH POSITIONING	H.6
	CENTRAL FIXING SCREW	M3X0,5 L=28.7mm
	GASKET TYPE	PROFILED (NBR)
	PROTECTION CLASS	IP67
	CIRCUIT TYPE	BIPOLAR YELLOW LED+VARISTOR
	RATED VOLTAGE	24V AC/DC
	CONNECTOR WITH H.T.P.LOGO	
CABLE FEATURES	H.T.P.CABLE CODE	CAVO 06
	NUMBER OF CONDUCTORS	N°3
	CONDUCTORS SECTION	1mm²
	CABLE MATERIAL	PVC CEI2022IIOR
	COATING COLOUR	GREY
	CONDUCTORS INSULATION MATERIAL	PVC
	CABLE LENGTH	5000mm
	STRIPPING	35mm STANDARD
	PEELING AND TINNING	5mm STANDARD

TOLLERANZE ±0.3		DISEGNATORE LORENZO CIMMINO	DATA 23-01-2019	SCALA 1 : 1	DISEGNO N.
U.d.M	ANGOLO	CONTROLLATO ROBERTO SUGLIANI			
DESCRIZIONE DIN43650/B,2POLES+EARTH(H.6),WITH YELLOW LED+VARISTOR, 24V,WITH PVC/PVC CABLE,CEI2022IIOR,3X1mm²,GREY,L=5m CONNECTOR WITH H.T.P.LOGO.			TIPO CM2		MATERIALE
H.T.P. HIGH TECH PRODUCTS			CODICE CM2N02VG1A065		