

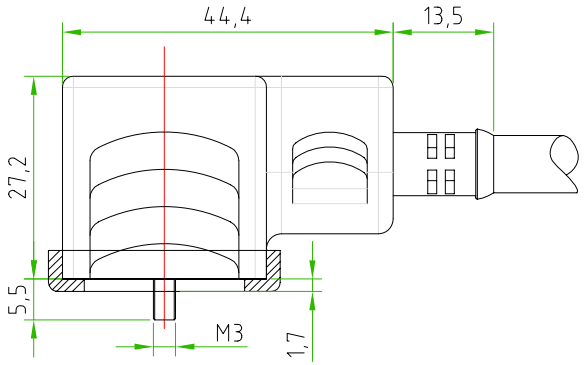

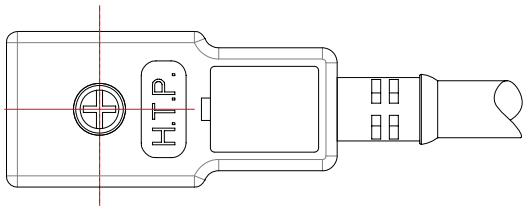

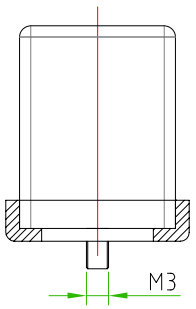

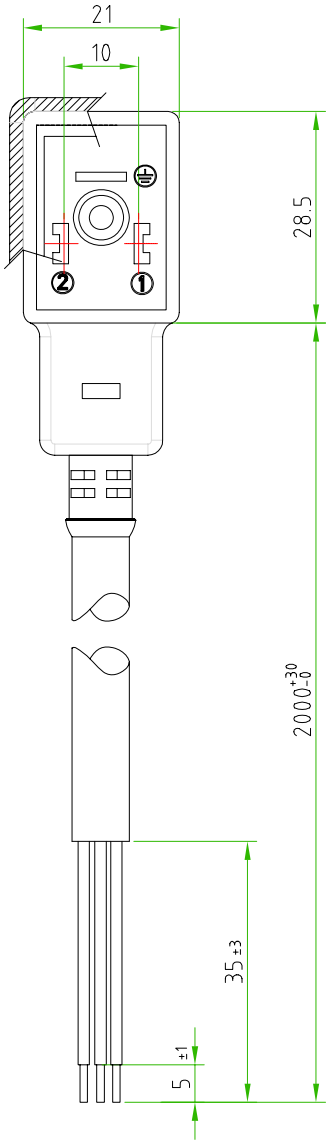

CONNECTOR FEATURES	PRODUCT TYPE	CM2 SERIES
	HOUSING COLOUR	BLACK
	CONTACT TYPE	2POLES+EARTH
	CONTACT SPACING	10mm
	CABLE LENGHT	2000mm
	PROTECTION CLASS	IP67
	STRIPPING	35mm STANDARD
	PEELING AND TINNING	5mm STANDARD
	FIXING SCREW	M3X28.7
	PROFILED GASKET	NBR
	EARTH POSITION H	12
	VOLTAGE	1-250V AC/DC
	CONNECTOR WITHOUT ELECTRONIC	
	CONNECTOR WITH H.T.P.LOGO	
CABLE FEATURES	H.T.P. CABLE CODE	02
	NUMBER OF CONDUCTORS	N°3
	CONDUCTOR SECTION	0.75mm^2
	CABLE MATERIAL	PVC IEC332-1 H05VVF
	CABLE COLOUR	BLACK
	CONDUCTOR INSULATION MATERIAL	PVC

TOLLERANZE ±0.3	DISEGNATORE LORENZO CIMMINO	DATA 06-09-12	SCALA 1 : 1		DISEGNO N.
U.d.M / ANGOLO	CONTROLLATO				
DESCRIZIONE: DIN43650/B,2POLES+EARTH(H.12),WITHOUT ELECTRONIC,WITH CABLE PVC/PVC,IEC332-1 H05VVF,3X0.75mm^2,BLACK,L=2m		TIPO: CM2			MATERIALE
High Tech Products HTP H.T.P. HIGH TECH PRODUCTS		CODICE: CM2N02000B022			