Rev.	Modify	Date	Firma	Approved

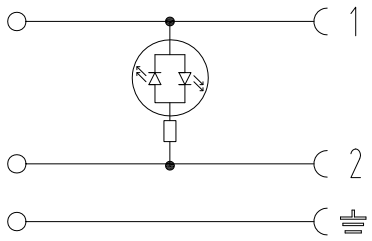

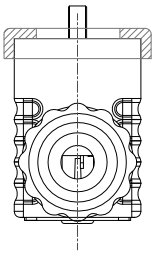

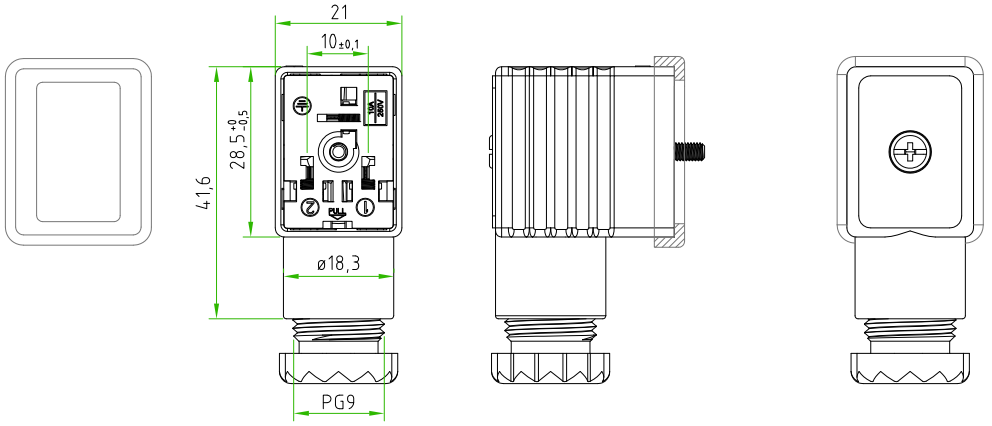

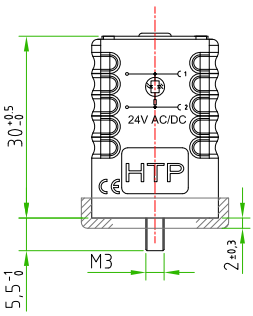

CONNECTOR FEATURES		
	PRODUCT TYPE	EN175301-803 STANDARD FORM B FIELD ATTACHABLE.
	HOUSING MATERIAL/COLOUR	PA66 /TRANSPARENT
	PRESS-CABLE MATERIAL/COLOUR	PA66 /BLACK
	INTERNAL CORE MATERIAL/COLOUR	PA66 /BLACK
	HEIGHT HOUSING	30mm
	CONTACTS SPACING	10mm
	CONTACTS TYPE	SCREW CONTACTS(with protection plate)
	NUMBER OF POLES	2POLES+EARTH
	EARTH POSITIONING	H.12 (TURNABLE)
	CABLE EXIT	PG9
	SUITABLE CABLE	FROM ø6mm TO ø8mm
	MAX.CONDUCTOR SIZE	1,5mm²
	PROTECTION CLASS	IP67
	CIRCUIT TYPE	BIPOLAR RED LED
	RATED VOLTAGE	24V AC/DC
	CONNECTOR TEMPERATURE RANGE	from -40°C to +90°C
	GASKET TYPE	PROFILED NBR
	FIXING SCREW	M3X0,5 L=32,5mm
	CONNECTOR WITH H.T.P. LOGO	

CUSTOMER APPROVAL	
SIGNATURE	DATE
PLEASE SIGN AND RETURN	

Rev.	Modify	Date	Signed	Approved

A4

Designer	CIMMINO L.	Date	2018-07-13	Tollerance ±0,2	Units: mm	Series EN175301-803 (form B)	Drawing n. 1/1
Approved	SUGLIANI R.	Date	2018-07-13	Scale 1:1	Size: A4	Customer code:	

HTP™ High Tech Products S.R.L.

DESCRIPTION

RECTANGULAR CONNECTOR EN175301-803 FORM B,FIELD ATTACHABLE, 10mm,2P.+PE, WITH RED LED, 24V,TRANSPARENT HOUSING, PG9. CONNECTOR WITH H.T.P. LOGO.

H.T.P.PART NUMBER

M2TS2L01

H.T.P. High Tech Products S.R.L. Via Lesina,45 -24030- Brembate di Sopra (Bg) - ITALY Phone:+39.035692509 Fax:+39.035203291 E-mail: info@webhtp.eu Web: http://www.webhtp.eu/

ALL RIGHTS ARE RESERVED.