

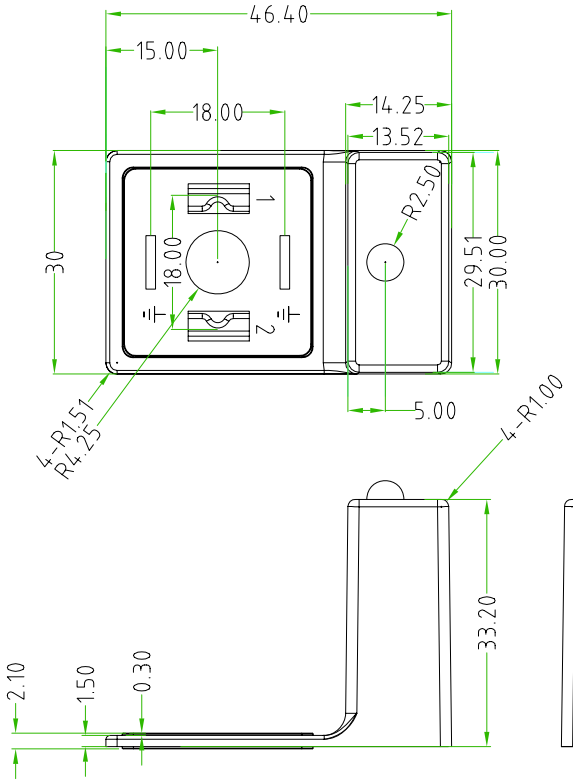

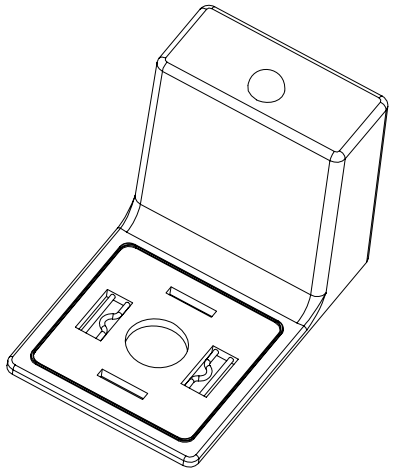

CONNECTOR FEATURES		
	PRODUCT TYPE	DIN43650/A ADAPTOR
	HOUSING COLOUR	BLACK
	CONTACT SPACING	18mm
	NUMBER OF POLES	2POLES+EARTH
	CIRCUIT TYPE	RED LED + VARISTOR
	VOLTAGE	115V AC/DC

TOLLERANZE ±0.3		DISEGNATORE LORENZO CIMMINO	DATA 09-06-10	SCALA 1 : 1	DISEGNO N.
U.d.M	ANGOLO	CONTROLLATO			
DESCRIZIONE: ADAPTER FOR DIN43650/A,2POLES+EARTH(H.6/12),WITH RED LED+VARISTOR,115V.			TIPO: ADAPTORS		MATERIALE
H.T.P. HIGH TECH PRODUCTS			CODICE: AG1N02VL2		