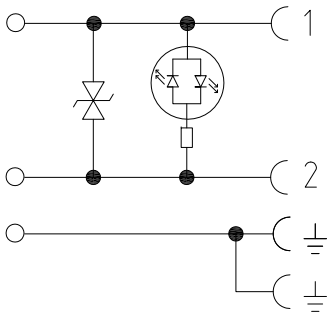

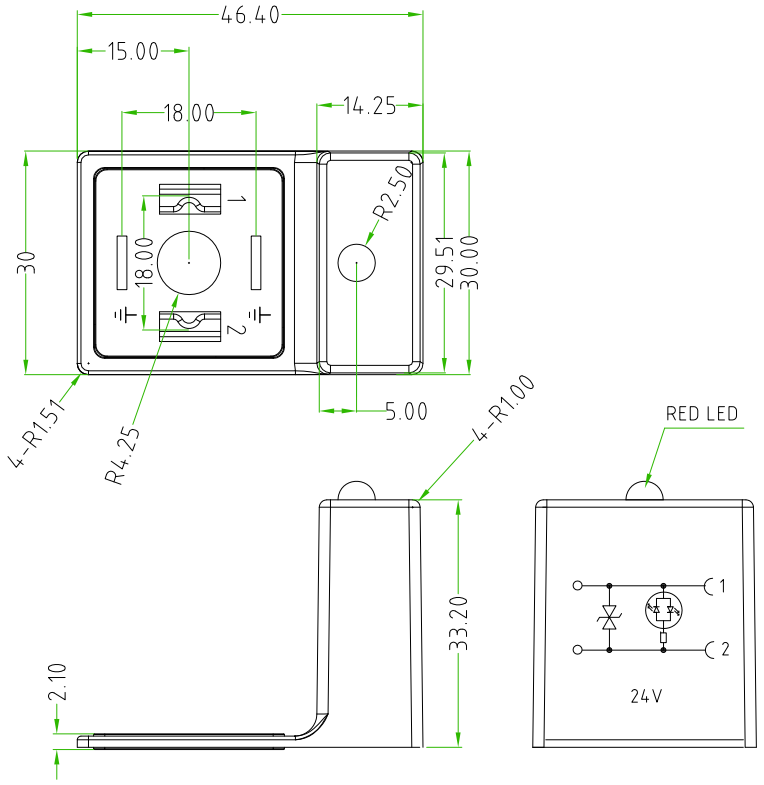

ADAPTOR FEATURES		
	PRODUCT TYPE	DIN43650/A ADAPTOR
	HOUSING COLOUR	BLACK
	CONTACT SPACING	18mm
	NUMBER OF POLES	2POLES+EARTH
	CIRCUIT TYPE	RED LED+ TRANSIL
	VOLTAGE	24V AC/DC

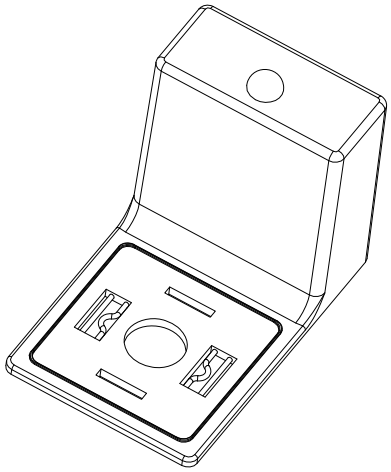

TOLLERANZE ±0,2	DISEGNATORE LORENZO CIMMINO	DATA 16-03-15	SCALA 1 : 1		DISEGNO N.	
U.d.M / ANGOLO	CONTROLLATO					
DESCRIZIONE: ADAPTOR FOR DIN43650/A,2POLES+EARTH(H.6/12),WITH RED LED+TRANSIL,24V.		TIPO: ADAPTORS			MATERIALE	
H.T.P. HIGH TECH PRODUCTS		CODICE: AG1N02TL1				