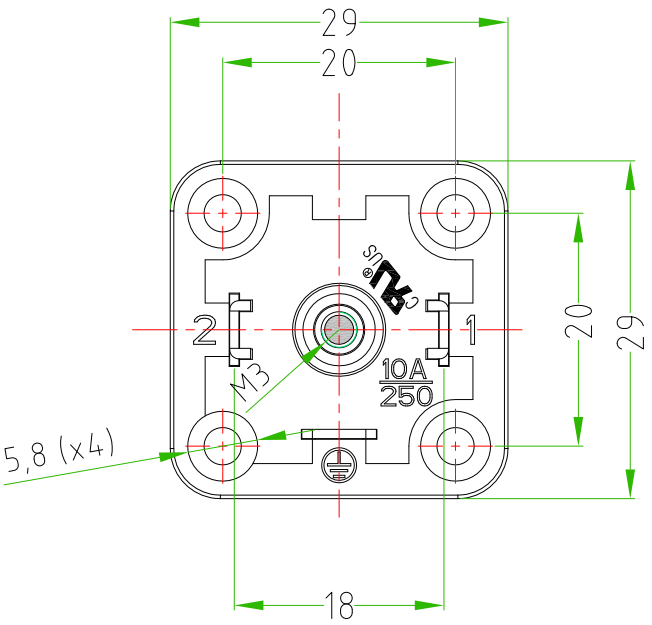

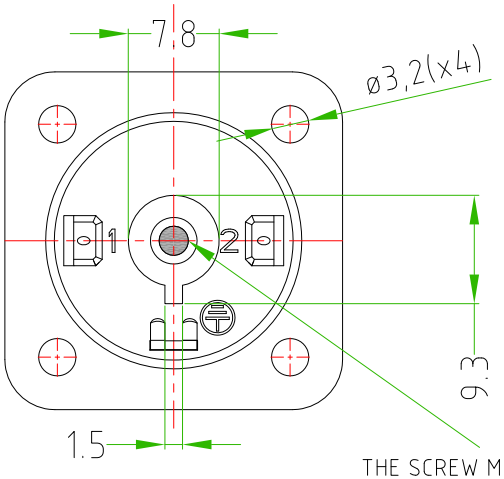

THE SCREW MUST BE CLOSED

BASE FEATURES		
	PRODUCT TYPE	SQUARE BASE BG4
	CONTACTS SPACING	18mm
	NUMBER OF CONTACTS	2POLES+EARTH
	CONTACT MATERIAL AND TREATMENT	PCuZn,SILVER PLATED
	CONTACT TYPE	SOLDERED
	MATERIAL BASE	PA66 BASFC3U
	COLOUR BASE	BLACK
	PROTECTION CLASS	IP67
	NUMBER OF FIXING HOLES	N°4
	NUMBER OF SCREWS M3X7.3 USED FOR THE FIXING HOLES	N°4
	FLAT GASKET	NBR
	DIAMETER OF CIRCULAR PART	22mm

ATTENTION USE THE MATERIAL PA66 BASFC3U

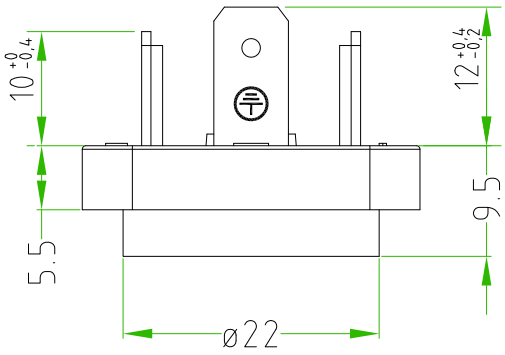

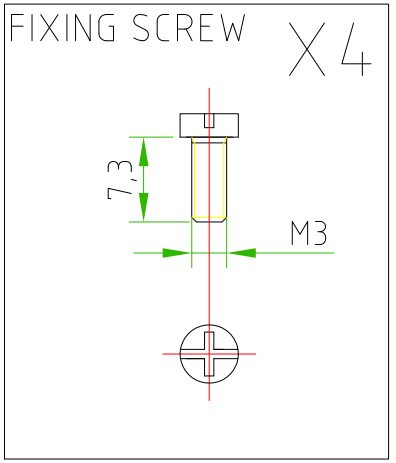

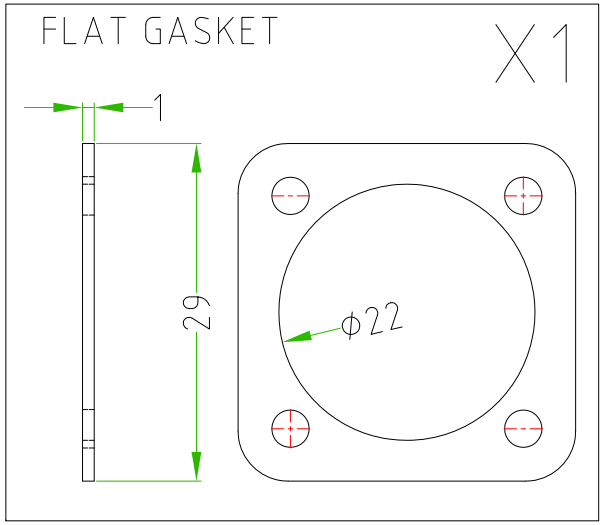

TOLLERANZE ±0.2	DISEGNATORE LORENZO CIMMINO	DATA 11.03.2015	SCALA n.d		DISEGNO N.
U.d.M / ANGOLO	CONTROLLATO				
DESCRIZIONE: Basis for DIN43650-A 2poles+earth with circular part+flat gasket		TIPO: BASIS DIN43650-A		MATERIALE	
H.T.P. HIGH TECH PRODUCTS		CODICE: BG4N02000-UL90			