Rev.	Modify	Date	Signed	Approved

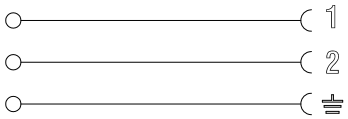

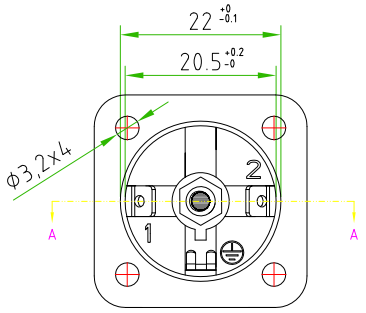

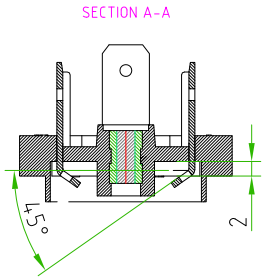

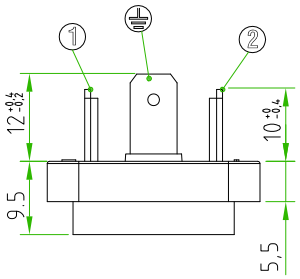

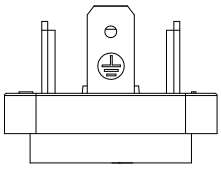

BASE FEATURES		
	PRODUCT TYPE	SQUARE BASE EN175301-803(type-A)
	COLOUR BASE	BLACK
	MATERIAL BASE	PA66
	CONTACTS TYPE	MALE TO SOLDERED
	CONTACTS MATERIAL	BRASS + SILVER PLATED
	CONTACTS SPACING	18mm
	NUMBER OF CONTACTS	2POLES+EARTH
	FIXING HOLES	N°4
	DIAMETER OF CIRCULAR PART	ø22mm
	DIAMETER OF FIXING HOLES	ø3,2mm
	M3 CENTRAL NUT TYPE	HEXAGONAL - CLOSED
	⚠ GASKET MATERIAL (COMPOUND/WEIGHT%) GASKET TYPE CODE:10001400H-1	NBR 41% SOFTENER 7% SOOT 26% ASH(FILLER MEDIUM) 25%
	M3 FIXING SCREW (x4)	L=7,3mm
	PROTECTION CLASS	IP65
	TEMPERATURE RANGE	FROM -40°C TO +90°C
	RATED VOLTAGE	250V AC / 300V DC
	NOMINAL CURRENT	10A
	BASE WITHOUT H.T.P.LOGO	

⚠ PAY ATTENTION:
THE ANGLE OF CONTANCT (SOLDER SIDE) MUST BE 45°

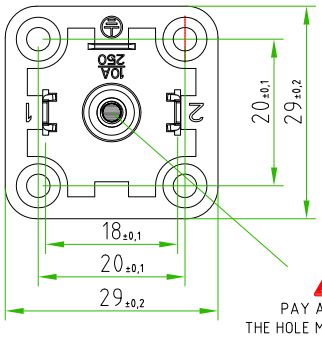

⚠ PAY ATTENTION:
THE HOLE MUST BE CLOSED

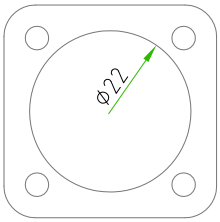

N.4 FIXING SCREWS

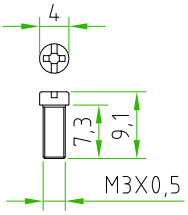

CUSTOMER APPROVAL	
SIGNATURE	DATE
PLEASE SIGN AND RETURN	

Designer	SUGLIANI R.	Date 2017-12-01	Tollerance ±0.2	Units: mm	Series EN175301-803	Drawing n. 1-2
Approved	CIMMINO L.	Date 2017-12-01	Scale 1:1	Size: A4	Customer code:	

A4

HTP™ HIGH TECH PRODUCTS S.R.L.

DESCRIPTION

SQUARE BASE EN175301-803(type-A),2P.+P.E.,BLACK,CENTRAL NUT CLOSED WITH N°4 FIXING HOLES,COMPLETE WITH FLAT GASKET AND SCREWS
BASE WITHOUT H.T.P.LOGO.

H.T.P.PART NUMBER

BG4N02000

H.T.P. High Tech Products S.R.L. Via Lesina,45 -24030- Brembate di Sopra (Bg) - ITALY Phone:+39.035692509 Fax:+39.035203291 E-mail: info@webhtp.eu Web: http://www.webhtp.eu/

ALL RIGHTS ARE RESERVED.

Rev.	Modify	Date	Signed	Approved

PACKAGING

EACH PLASTIC BLISTER CONTAINS 200PCS.
INSERT N°5 BLISTERS(200PCS) IN A BIG CARTON BOX 38.5X38.5X28.

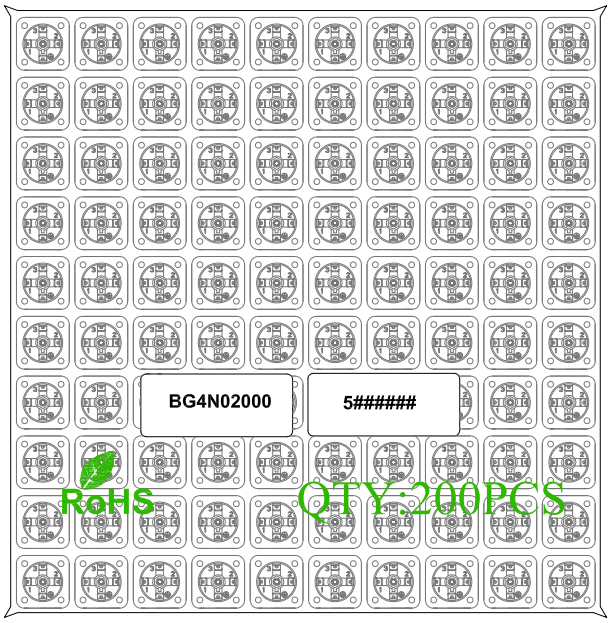

ATTACHED ON EACH BLISTER THE PLASTIC BAGS
EACH PLASTIC BAG CONTAINS:
- PLASTIC BAG WITH 800 SCREWS M3 L=7,3mm
- PLASTIC BAG WITH 200 FLAT GASKET

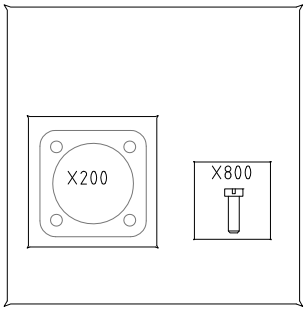

PLEASE APPLY ON EACH PLASTIC VACUUM BLISTER AND ON EXTERNAL CARTON BOX
THE WHITE LABEL WITH H.T.P. PART NUMBER BG4N02000

BG4N02000

ADD ON EACH PLASTIC VACUUM BLISTER WHITE LABEL WITH H.T.P. PRODUCTON
DATE CODE 5######

5######

CUSTOMER APPROVAL	
SIGNATURE	DATE
PLEASE SIGN AND RETURN	

Designer	SUGLIANI R.	Date 2017-12-01	Tollerance ±0.2	Units: mm	Series EN175301-803	Drawing n. 1-2
Approved	CIMMINO L.	Date 2017-12-01	Scale 1:1	Size: A4	Customer code:	

A4

HTP™ HIGH TECH PRODUCTS S.R.L.

DESCRIPTION

SQUARE BASE EN175301-803(type-A),2P.+P.E.,BLACK,CENTRAL NUT CLOSED WITH N°4 FIXING HOLES,COMPLETE WITH FLAT GASKET AND SCREWS
BASE WITHOUT H.T.P.LOGO.

H.T.P.PART NUMBER

BG4N02000

H.T.P. High Tech Products S.R.L. Via Lesina,45 -24030- Brembate di Sopra (Bg) - ITALY Phone:+39.035692509 Fax:+39.035203291 E-mail: info@webhtp.eu Web: http://www.webhtp.eu/

ALL RIGHTS ARE RESERVED.