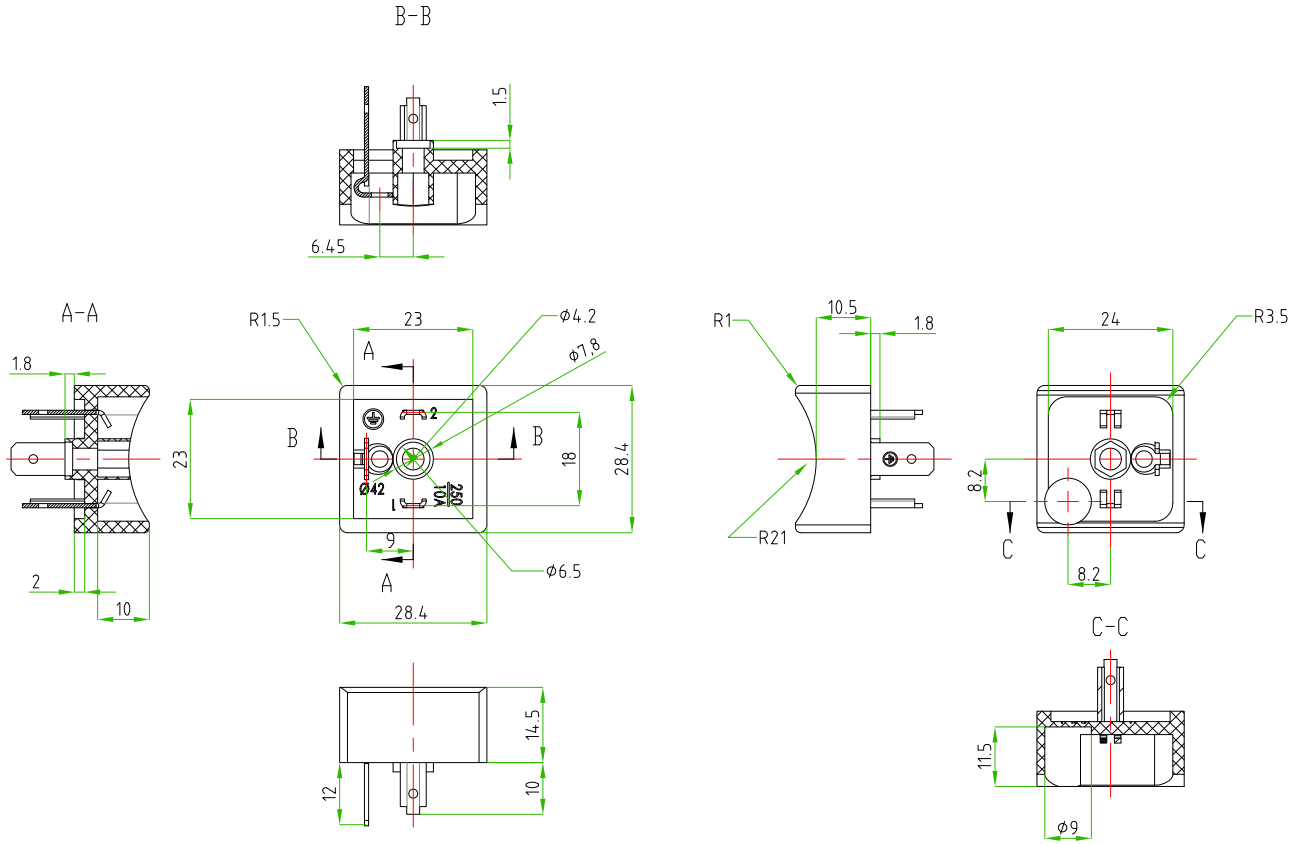

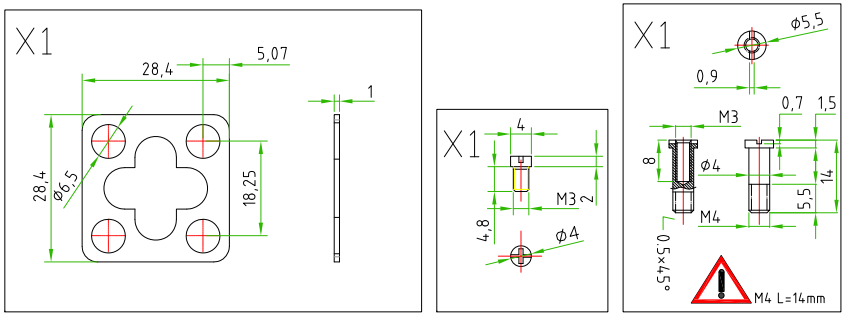

BASE FEATURES	
PRODUCT TYPE	SQUARE BASE BG42
CONTACTS SPACING	18mm
NUMBER OF CONTACTS	2POLES+EARTH
CONTACT MATERIAL AND TREATMENT	PCuZn,SILVER PLATED
CONTACT TYPE	SOLDERED
MATERIAL BASE	PA66
COLOUR BASE	BLACK
PROTECTION CLASS	IP65
NUMBER OF FIXING HOLES	N°1
HOLES FOR THE PASSAGE OF SOLDERED WIRES	N°3
NUMBER OF CROSS HEADED SCREWS M4 L=14mm USED FOR THE FIXING HOLES	N°1
NUMBER OF CROSS HEADED SCREW M3X4.8 USED FOR EARTH PIN	N°1
FLAT GASKET	NBR

SQUARE BASE FOR MOUNTING ON THE CYLINDER ø42mm
RADIUS OF THE BASE: 21mm

TOLLERANZE ±0.2	DISEGNATORE LORENZO CIMMINO	DATA 08.04.14	SCALA TO FIT		DISEGNO N.
U.d.M	ANGOLO	CONTROLLATO			
DESCRIZIONE SQUARE BASE FOR MOUNTING ON THE CYLINDER ø42mm 2POLES+EARTH,BLACK.		TIPO BG42			MATERIALE
H.T.P. HIGH TECH PRODUCTS		CODICE BG42N02000			