

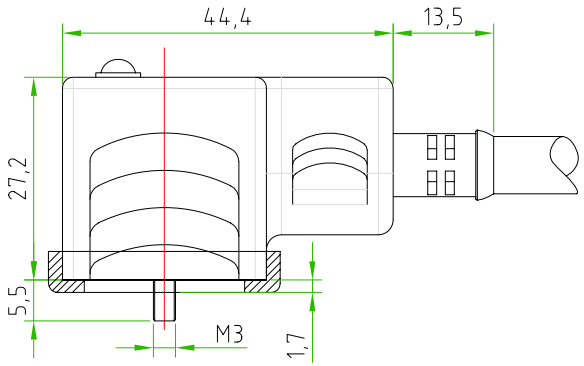

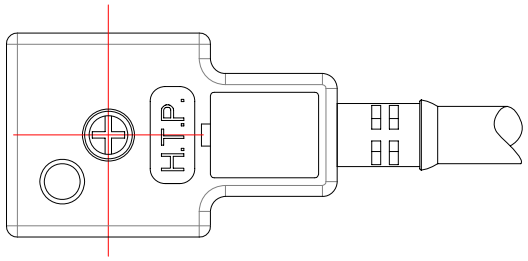

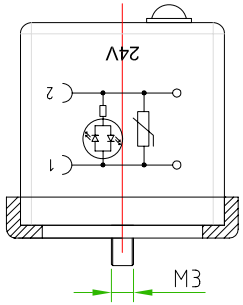

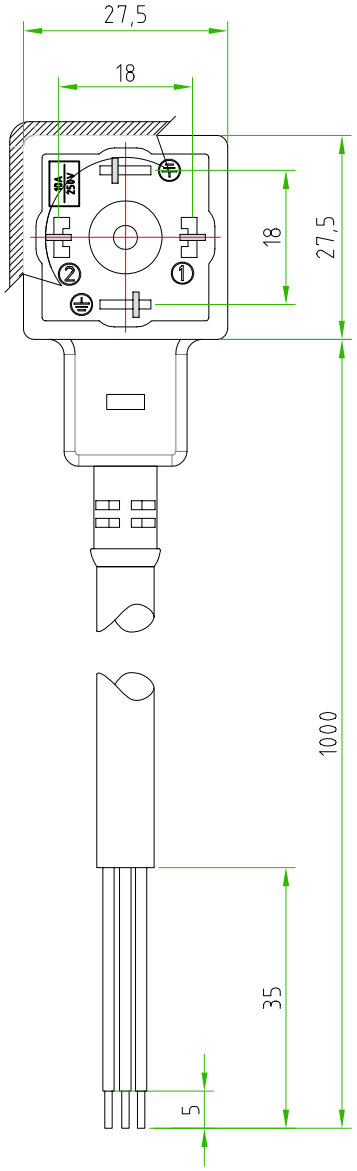

CONNECTOR FEATURES	PRODUCT TYPE	CG1 SERIES
	HOUSING COLOUR	BLACK
	CONTACT TYPE	2POLES+EARTH
	CONTACT SPACING	18mm
	CABLE LENGHT	1000mm
	PROTECTION CLASS	IP67
	STRIPPING	35mm STANDARD
	PEELING AND TINNING	5mm STANDARD
	FIXING SCREW	M3X28.7
	PROFILED GASKET	PVC
	EARTH H	6/12
	VOLTAGE	24V AC/DC
	CONNECTOR WITH GREEN LED + VARISTOR	
CABLE FEATURES	H.T.P. CABLE CODE	11
	NUMBER OF CONDUCTORS	N°3
	CONDUCTOR SECTION	0.75mm^2
	CABLE MATERIAL	PUR Li-YY11Y
	CABLE COLOUR	BLACK
	CONDUCTOR INSULATION MATERIAL	PUR

TOLLERANZE		DISEGNATORE	DATA	SCALA	DISEGNO N.
		LORENZO CIMMINO			
U.d.M	ANGOLO	CONTROLLATO	25-11-10	1 : 1	

DESCRIZIONE
DIN43650/A,2POLES+EARTH(H.6/12),WITH GREEN LED+VDR, 24V,WITH CABLE PUR/PUR,Li-YY11Y,3X0.75mm^2,BLACK,L=1m

TIPO: CG1

MATERIALE

High Tech Products HTP H.T.P. HIGH TECH PRODUCTS

CODICE: CG1N02VV1C111