

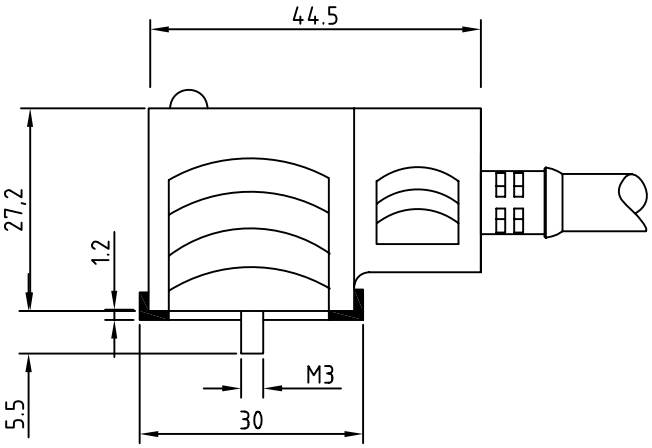

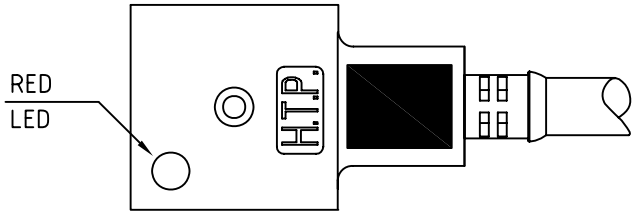

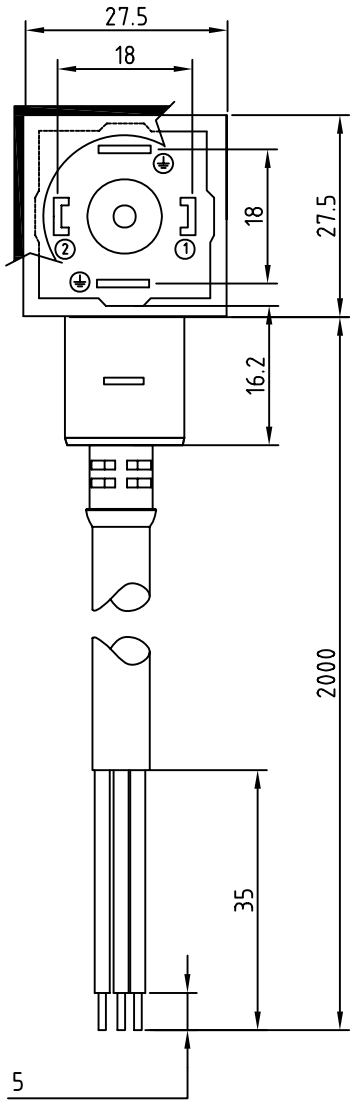

CONNECTOR FEATURES	CONTACT TYPE	2POLES+EARTH
	CABLE LENGHT	2000mm
	PROTECTION CLASS	IP67
	STRIPPING	35mm STANDARD
	PEELING	5mm STANDARD
	FIXING SCREW	M3X28,7
	PROFILED GASKET	NBR
	EARTH H.	6/12
	VOLTAGE	12V
	CONNECTOR WITH RED LED+VARISTOR	
CABLE FEATURES	H.T.P.CABLE CODE	09
	NUMBER OF CONDUCTORS	n°3
	CONDUCTOR SECTION	0,75mm²
	CABLE MATERIAL	PUR V0
	COATING COLOUR	BLACK
	CONDUCTOR INSULATION MATERIAL	PVC

TOLLERANZE		DISEGNATORE LORENZO CIMMINO	DATA 12-03-09	SCALA 1 : 1	DISEGNO N.
U.d.M	ANGOLO	CONTROLLATO			
DESCRIZIONE: DIN43650/A,2POLES+EARTH,WITH RED LED+VARISTOR 12V,WITH CABLE PUR/PVC,V0,BLACK,3X0,75mm²,L=2m			TIPO: CG1		MATERIALE
H.T.P. HIGH TECH PRODUCTS			CODICE: CG1N02VL4C092		