

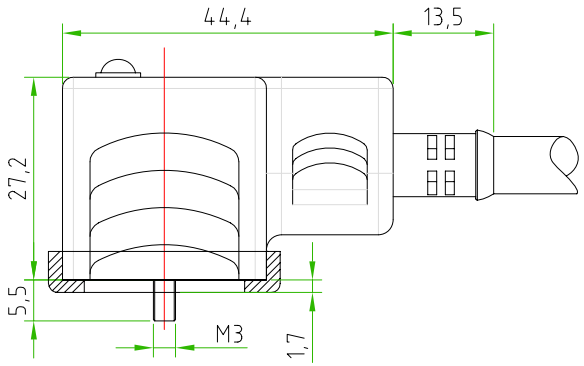

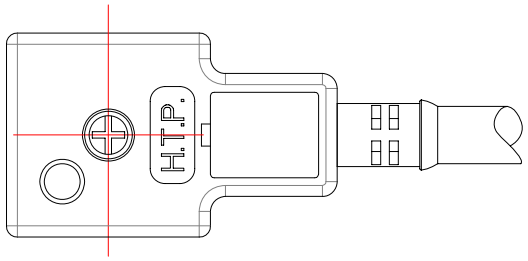

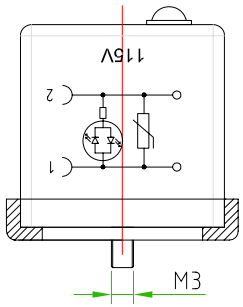

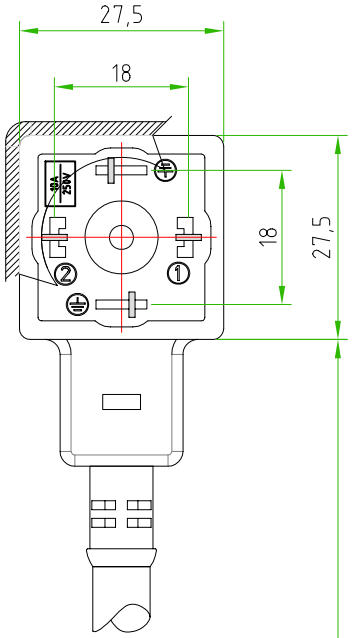

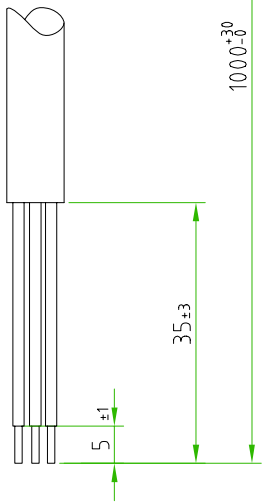

CONNECTOR FEATURES	PRODUCT TYPE	CG1 SERIES
	HOUSING COLOUR	BLACK
	CONTACT TYPE	2POLES+EARTH
	CONTACT SPACING	18mm
	CABLE LENGHT	1000mm
	PROTECTION CLASS	IP67
	STRIPPING	35mm STANDARD
	PEELING AND TINNING	5mm STANDARD
	FIXING SCREW	M3X28.7
	PROFILED GASKET	NBR
	EARTH POSITIONING H	6/12
	VOLTAGE	115V AC/DC
	CONNECTOR WITH RED LED + VARISTOR	
	CONNECTOR WITH H.T.P.LOGO	
CABLE FEATURES	H.T.P. CABLE CODE	02
	NUMBER OF CONDUCTORS	N°3
	CONDUCTOR SECTION	0,75mm²
	CABLE MATERIAL	PVC IEC332-1 H05VVF
	CABLE COLOUR	BLACK
	CONDUCTOR INSULATION MATERIAL	PVC

TOLLERANZE ±0.3	DISEGNATORE LORENZO CIMMINO	DATA 24-09-12	SCALA 1 : 1		DISEGNO N.
U.d.M / ANGOLO	CONTROLLATO				
DESCRIZIONE: DIN43650/A,2POLES+EARTH(H.6/12),WITH RED LED+VARISTOR, 115V,WITH CABLE PVC/PVC,IEC332-1 H05VVF,3X0.75mm², L=1m		TIPO: CG1			MATERIALE
High Tech Products HTP H.T.P. HIGH TECH PRODUCTS		CODICE: CG1N02VL2C021			