Rev.	Modify	Date	Signed	Approved

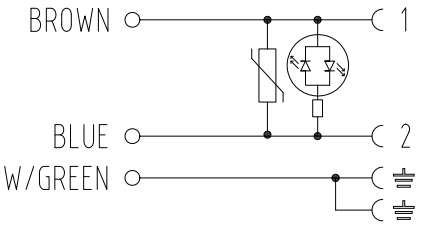

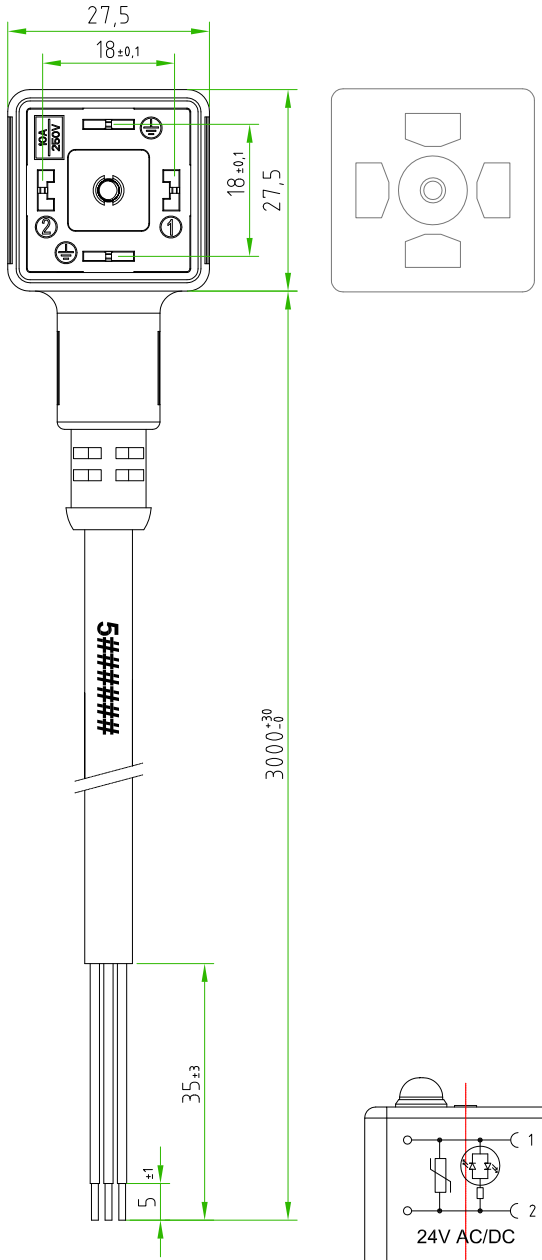

CONNECTOR FEATURES	PRODUCT TYPE	SQUARE CONNECTOR EN175301-803(type-A)
	CONNECTOR COLOUR	BLACK
	CONTACTS SPACING	18mm
	NUMBER OF CONTACTS	2POLES+2EARTHS
	EARTH POSITIONING	H.6-12
	CENTRAL FIXING SCREW	M3X0,5 L=25mm
	GASKET TYPE	INTEGRATED (NBR)
	PROTECTION CLASS	IP67
	CIRCUIT TYPE	BIPOLAR YELLOW LED+VARISTOR
	RATED VOLTAGE	24V AC/DC
	CONNECTOR WITH H.T.P. LOGO	
CABLE FEATURES	H.T.P.CABLE CODE	CAVO 03
	NUMBER OF CONDUCTORS	N°3
	CONDUCTORS SECTION	0,75mm²
	CABLE MATERIAL	PVC CEI2022IIOR
	COATING COLOUR	GREY RAL7032
	CONDUCTORS INSULATION MATERIAL	PVC
	CABLE LENGHT	3000mm
	STRIPPING	35mm STANDARD
	PEELING AND TINNING	5mm STANDARD
	ON THE CABLE,NEAR THE CONNECTOR HEAD,MUST BE SILK PRINTED THE H.T.P. PRODUCTION DATE CODE 5######	

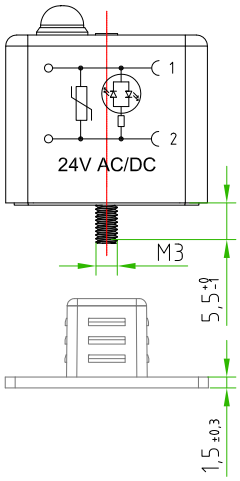

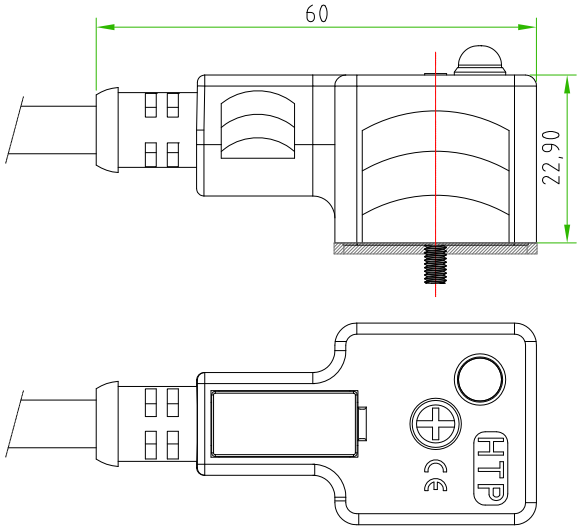

CUSTOMER APPROVAL	
SIGNATURE	DATE
PLEASE SIGN AND RETURN	

Designer	CIMMINO L.	Date	2015-12-09	Tollerance	±0,3	Units:	mm	Series	EN175301-803	Drawing n. 1-1
Approved	MAZZOLA M.	Date	2015-12-09	Scale	1:1	Size:	A4	Customer code:		

A4

HTP™ High Tech Products S.R.L.

DESCRIPTION

SQUARE CONNECTOR EN175301-803(type-A),2P.+P.E.,BLACK,WITH BIPOLAR YELLOW LED+VARISTOR,24V,WITH CABLE PVC/PVC,CEI2022IIOR,3G0.75mm²,GREY COLOUR, L=3m.CONNECTOR WITH H.T.P. LOGO

H.T.P.PART NUMBER

CG1N02VG1C033

H.T.P. High Tech Products S.R.L. Via Lesina,45 -24030- Brembate di Sopra (Bg) - ITALY Phone:+39.035692509 Fax:+39.035203291 E-mail: info@webhtp.eu Web: http://www.webhtp.eu/

ALL RIGHTS ARE RESERVED.