Rev.	Modify	Date	Signed	Approved

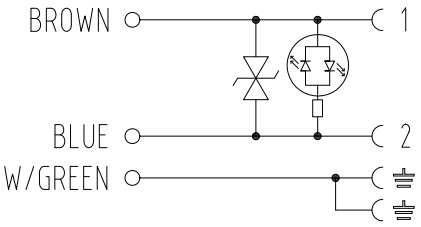

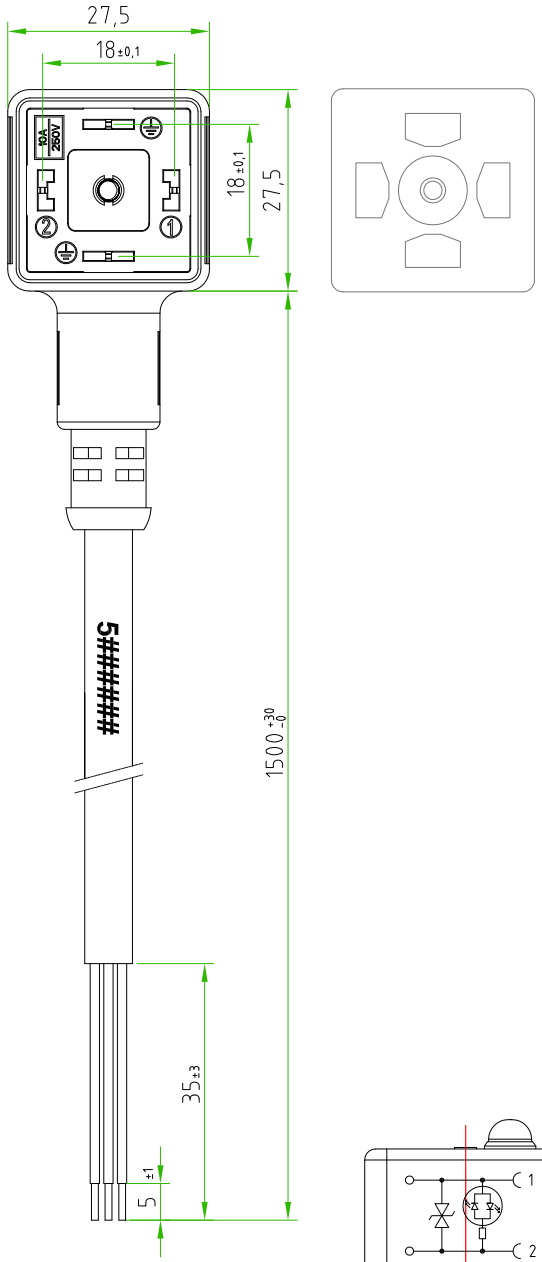

CONNECTOR FEATURES	PRODUCT TYPE	SQUARE CONNECTOR EN175301-803(type-A)
	CONNECTOR COLOUR	BLACK
	CONTACTS SPACING	18mm
	NUMBER OF CONTACTS	2POLES+2EARTHS
	EARTH POSITIONING	H.6-12
	CENTRAL FIXING SCREW	M3X0,5 L=25mm
	GASKET TYPE	INTEGRATED (NBR)
	PROTECTION CLASS	IP67
	CIRCUIT TYPE	BIPOLAR YELLOW LED+TRANSIENT VOLTAGE SUPPRESSION DIODE
	RATED VOLTAGE	12V AC/DC
	CONNECTOR WITH H.T.P.LOGO	
CABLE FEATURES	H.T.P.CABLE CODE	CAVO 02
	NUMBER OF CONDUCTORS	N°3
	CONDUCTORS SECTION	0,75mm²
	CABLE MATERIAL	PVC IEC332-1 H05VVF
	COATING COLOUR	BLACK
	CONDUCTORS INSULATION MATERIAL	PVC
	CABLE LENGHT	1500mm
	STRIPPING	35mm STANDARD
	PEELING AND TINNING	5mm STANDARD
	ON THE CABLE,NEAR THE CONNECTOR HEAD,MUST BE SILK PRINTED THE H.T.P. PRODUCTION DATE CODE 5######	

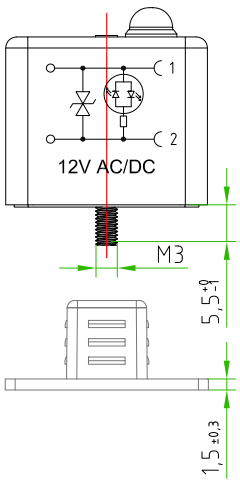

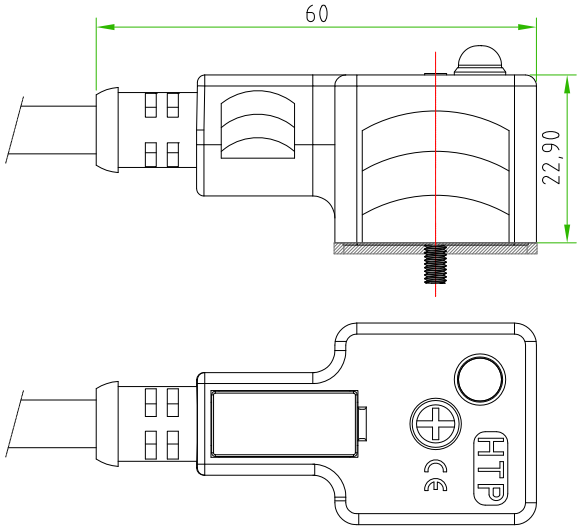

CUSTOMER APPROVAL	
SIGNATURE	DATE
PLEASE SIGN AND RETURN	

Designer	SUGLIANI R.	Date	2020-06-15	Tollerance	±0.3	Units:	mm	Series	EN175301-803	Drawing n.	1-1
Approved	CIMMINO L.	Date	2020-06-15	Scale	1:1	Size:	A4	Customer code:			

A4

HTP™ HIGH TECH PRODUCTS S.R.L.

DESCRIPTION

SQUARE CONNECTOR EN175301-803(type-A),2P.+P.E.,BLACK,WITH YELLOW RED+ TRANSIENT VOLTAGE SUPPRESSION DIODE,12V AC/DC,WITH CABLE PVC/PVC, IEC332-1 H05VVF,3G0.75mm², BLACK,L=1,5m.CONNECTOR WITH H.T.P.LOGO

H.T.P.PART NUMBER

CG1N02TG4C021E

H.T.P. High Tech Products S.R.L. Via Lesina,45 -24030- Brembate di Sopra (Bg) - ITALY Phone:+39.035692509 Fax:+39.035203291 E-mail: info@webhtp.eu Web: http://www.webhtp.eu/

ALL RIGHTS ARE RESERVED.