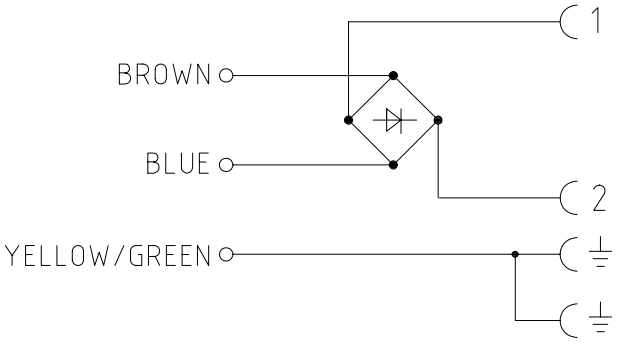

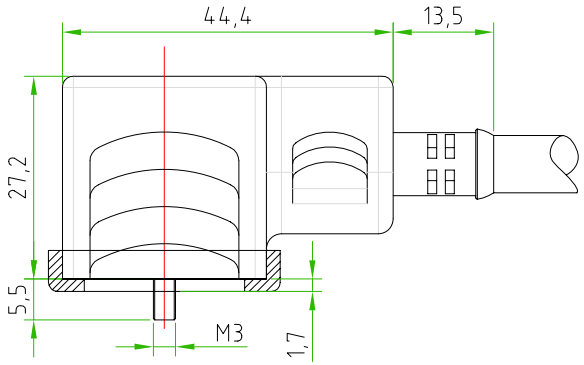

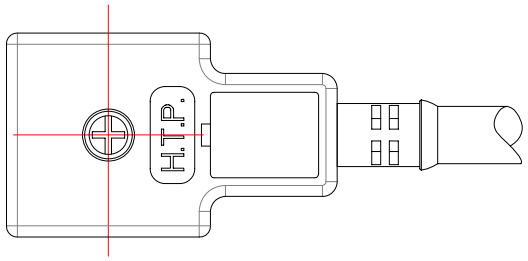

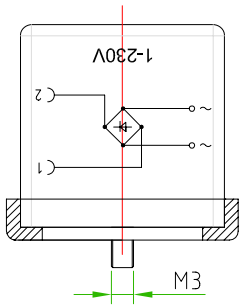

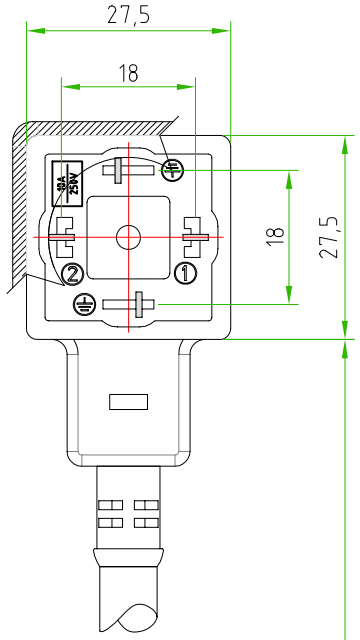

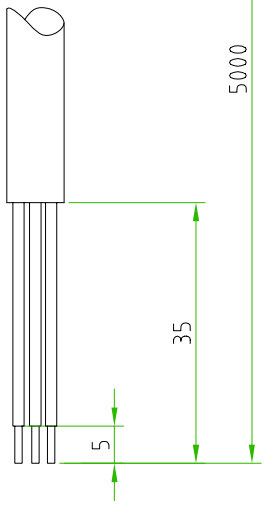

CONNECTOR FEATURES	PRODUCT TYPE	CG1 SERIES
	HOUSING COLOUR	BLACK
	CONTACT TYPE	2POLES+EARTH
	CONTACT SPACING	18mm
	CABLE LENGHT	5000mm
	PROTECTION CLASS	IP67
	STRIPPING	35mm STANDARD
	PEELING AND TINNING	5mm STANDARD
	FIXING SCREW	M3X28.7
	PROFILED GASKET	NBR
	EARTH H	6/12
	VOLTAGE	1-230V AC
	CONNECTOR WITH FULL WAVE BRIDGE RECTIFIER	
CABLE FEATURES	H.T.P. CABLE CODE	02
	NUMBER OF CONDUCTORS	N°3
	CONSUCTOR SECTION	0.75mm^2
	CABLE MATERIAL	PVC H05VVF
	CABLE COLOUR	BLACK
	CONDUCTOR INSULATION MATERIAL	PVC

TOLLERANZE		DISEGNATORE LORENZO CIMMINO	DATA 22-11-10	SCALA 1 : 1	DISEGNO N.
U.d.M	ANGOLO	CONTROLLATO			
DESCRIZIONE: DIN43650/A,2POLES+EARTH(H.6/12),WITH FULL WAVE BRIDGE RECTIFIER,1-230V,WITH CABLE PVC/PVC,H05VVF,3X0.75mm^2, BLACK,L=5m			TIPO: CG1		MATERIALE
H.T.P. HIGH TECH PRODUCTS			CODICE: CG1N02R03C025		