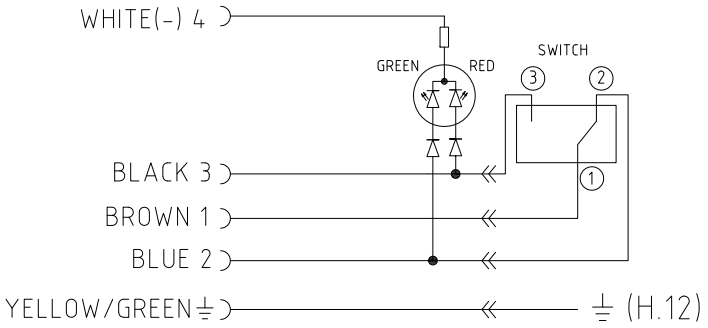

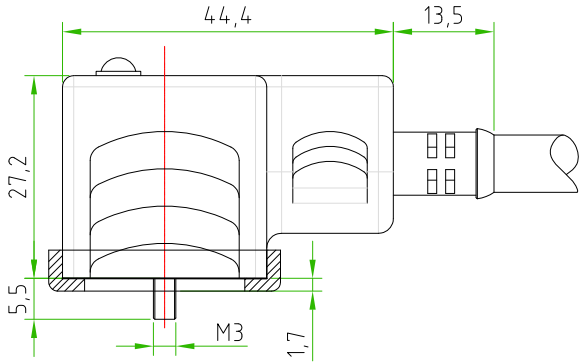

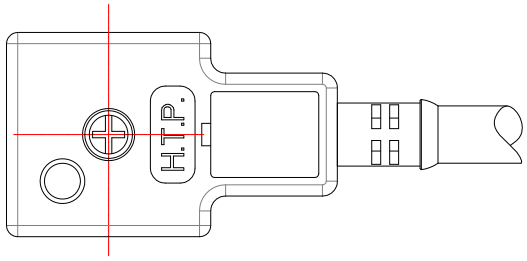

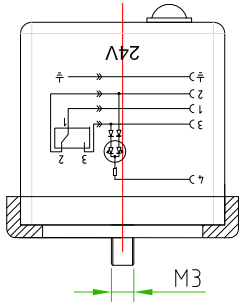

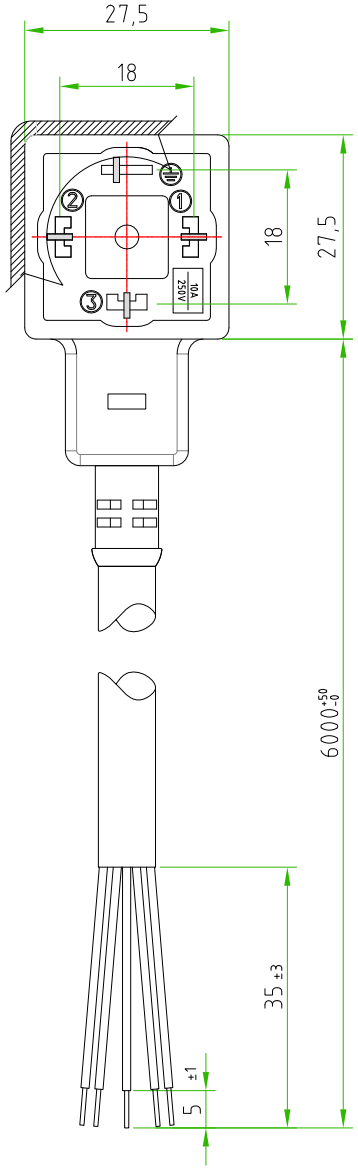

CONNECTOR FERTURES	PRODUCT TYPE	CG1 SERIES
	HOUSING COLOUR	BLACK
	CONTACT TYPE	3POLES+EARTH
	CONTACT SPACING	18mm
	CABLE LENGHT	6000mm
	PROTECTION CLASS	IP67
	STRIPPING	35mm STANDARD
	PEELING AND TINNING	5mm STANDARD
	FIXING SCREW	M3X28.7
	PROFILED GASKET	NBR
	EARTH POSITION	H.12
	VOLTAGE	24V AC/DC
	CONNECTOR WITH BICOLOUR LED + N°2 DIODE(1A) PLEASE PAY ATTENTION:PIN 3:RED;PIN 2:GREEN	
	CONNECTOR WITH H.T.P.LOGO	
CABLE FERTURES	H.T.P. CABLE CODE	CAVO C5
	NUMBER OF CONDUCTORS	N°5
	CONDUCTOR SECTION	0.75mm²
	CABLE MATERIAL	PVC CEI2022IIOR
	CABLE COLOUR	GREY RAL7032
	CONDUCTOR INSULATION MATERIAL	PVC

TOLLERANZE ±0.3	DISEGNATORE LORENZO CIMMINO	DATA 04-02-14	SCALA 1 : 1		DISEGNO N.
U.d.M / ANGOLO	CONTROLLATO				
DESCRIZIONE: DIN43650/A,3POLES+EARTH(H.12),WITHOUT BICOLOUR LED+N°2 DIODE,WITH CABLE PVC/PVC,CEI2022IIOR,5X0.75mm²,GREY, L=6m.CONNECTOR WITH H.T.P.LOGO		TIPO CG1			MATERIALE
H.T.P. HIGH TECH PRODUCTS		CODICE CG1N03LY1BC56			