Rev.	Modify	Date	Firma	Approved

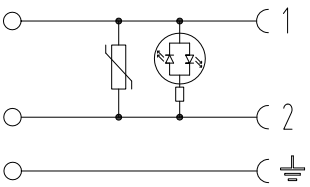

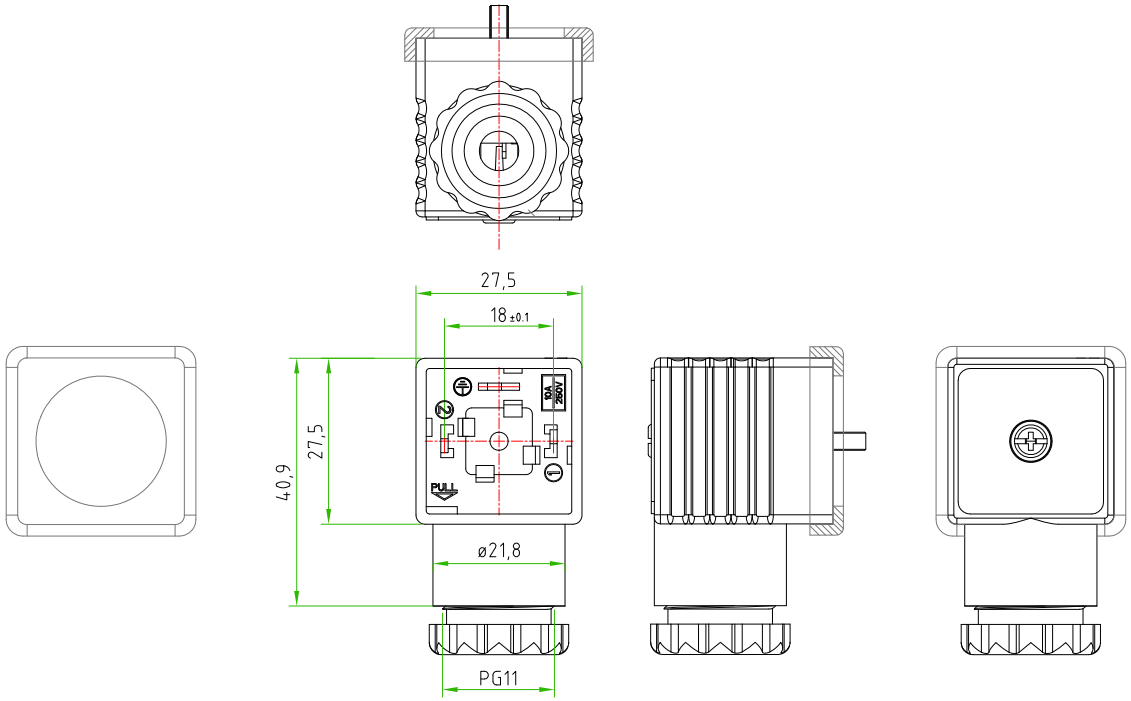

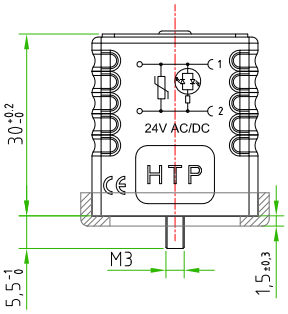

CONNECTOR FEATURES		
	PRODUCT TYPE	EN175301-803 FORM A FIELD ATTACHABLE.
	HOUSING MATERIAL/COLOUR	PA66 /TRANSPARENT
	PRESS-CABLE MATERIAL/COLOUR	PA66 /BLACK
	INTRENAL CORE MATERIAL/COLOUR	PA66 /BLACK
	HEIGHT HOUSING	30mm
	CONTACTS SPACING	18mm
	CONTACTS TYPE	SCREW CONTACTS(with protection plate)
	NUMBER OF POLES	2POLES+EARTH
	EARTH POSITIONING	H.12 (TURNABLE)
	CABLE EXIT	PG9/11 UNIFIED
	SUITABLE CABLE	FROM ø6mm TO ø10mm
	MAX.CONDUCTOR SIZE	1,5mm²
	PROTECTION CLASS	IP67
	CIRCUIT TYPE	BIPOLAR YELLOW LED+VARISTOR
	RATED VOLTAGE	24V AC/DC
	CONNECTOR TEMPERATURE RANGE	from -40°C to +90°C
	GASKET TYPE	PROFILED NBR
	FIXING SCREW	M3X0,5 L=32,5mm
	CONNECTOR WITH H.T.P. LOGO	

CUSTOMER APPROVAL	
SIGNATURE	DATE
PLEASE SIGN AND RETURN	

Rev.	Modify	Date	Signed	Approved

A4

Designer	SUGLIANI R.	Date 2016-04-21	Tollerance ±0,2	Units: mm	Series EN175301-803 (form A)	Drawing n. 1/1
Approved	CIMMINO L.	Date 2016-04-21	Scale 1:1	Size: A4	Customer code:	

HTP™ High Tech Products S.R.L.

DESCRIPTION

SQUARE CONNECTOR EN175301-803 FORM A,FIELD ATTACHABLE,2P.+PE, WITH BIPOLAR YELLOW LED+VARISTOR,24V AC/DC,TRANSPARENT HOUSING,PG9/11 unified.CONNECTOR WITH H.T.P. LOGO.

H.T.P.PART NUMBER

G1TU2VG1

H.T.P. High Tech Products S.R.L. Via Lesina,45 -24030- Brembate di Sopra (Bg) - ITALY Phone:+39.035692509 Fax:+39.035203291 E-mail: info@webhtp.eu Web: http://www.webhtp.eu/

ALL RIGHTS ARE RESERVED.