

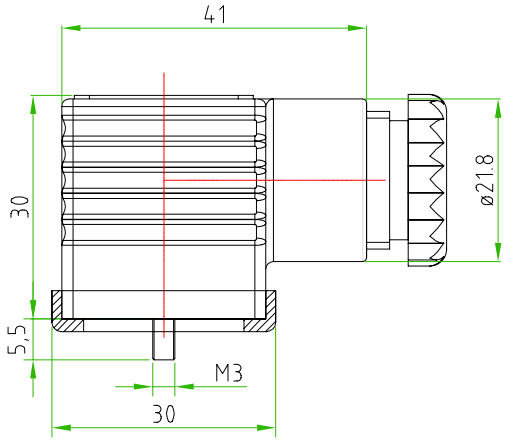

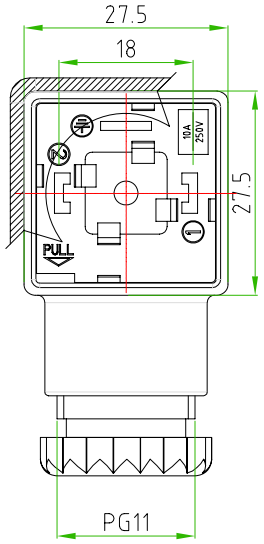

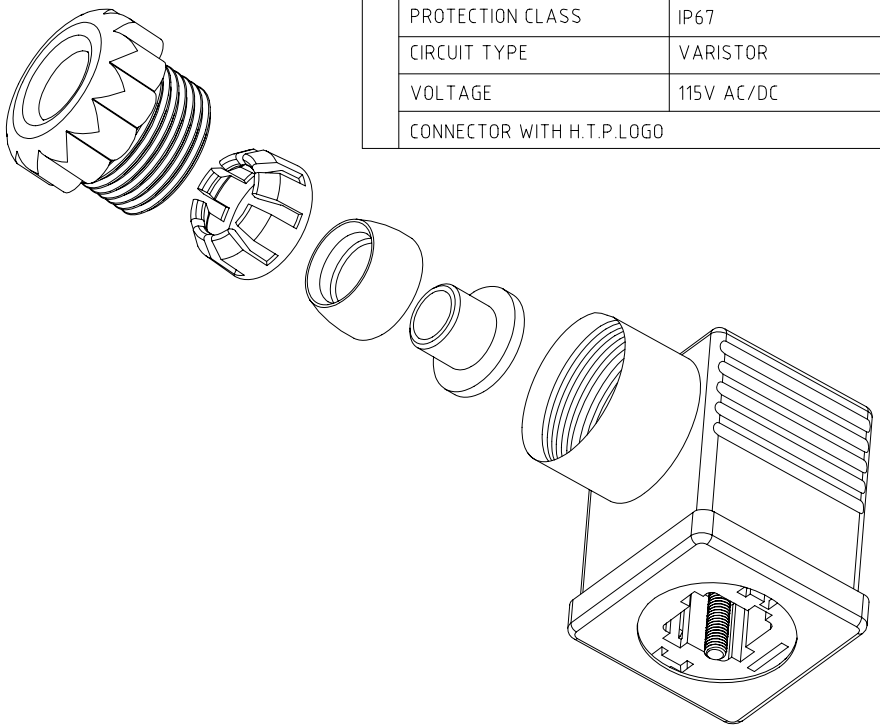

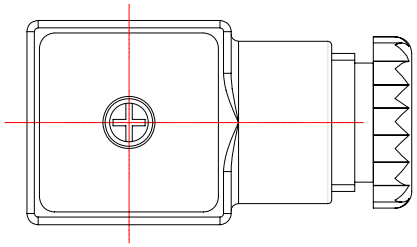

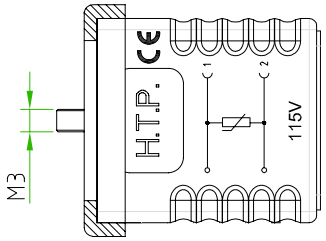

CONNECTOR FEATURES		
	PRODUCT TYPE	DIN43650/A CONNECTOR FIELD ATTACHABLE
	HOUSING COLOUR	BLACK
	HIGH HOUSING	30mm
	TYPE CONTACTS	SCREW WITH CONDUCTOR PROTECTION
	CONTACT SPACING	18mm
	NUMBER OF POLES	2POLES+EARTH
	EARTH POSITIONING	H.12
	CABLE EXIT	PG9/PG11 UNIFIED
	MAXIMUM CONDUCTOR SIZE	1,5mm
	FIXING SCREW	M3X32,5
	PROFILED GASKET	NBR
	PROTECTION CLASS	IP67
	CIRCUIT TYPE	VARISTOR
	VOLTAGE	115V AC/DC
	CONNECTOR WITH H.T.P.LOGO	

TOLLERANZE ±0.2		DISEGNATORE LORENZO CIMMINO	DATA 04-06-13	SCALA 1 : 1		PESO
U.d.M	ANGOLO	CONTROLLATO				
DESCRIZIONE CONNECTOR DIN43650/A,G1 SERIES,CONTACT SPACING,18mm,2P+E, BLACK HOUSING,WITH VARISTOR,115V,PG9/11 UNIFIED CONNECTOR WITH H.T.P.LOGO			TIPO G1			MATERIALE
High Tech Products HTP H.T.P. HIGH TECH PRODUCTS			CODICE G1NU2V02			