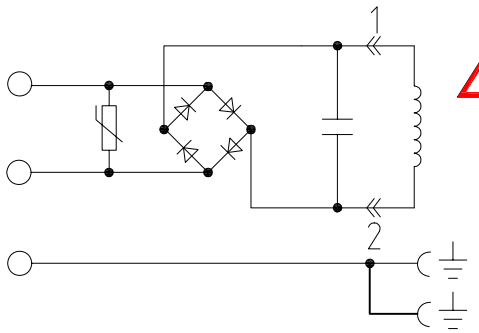

USE THE COMPONENTS
OF 3AMPERE
DIODES MODEL INSTEAD OF BRIDGE RECTIFIER:5408
VARISTOR MODEL:10D431K
RESISTANCE:10 Ohm G%
CONDENSER: MEX/TENTA MKP 0.1µF K X2 275VAC 40/100/21

THE COVER MUST HAVE THE
DIODE SYMBOL + CE SYMBOL

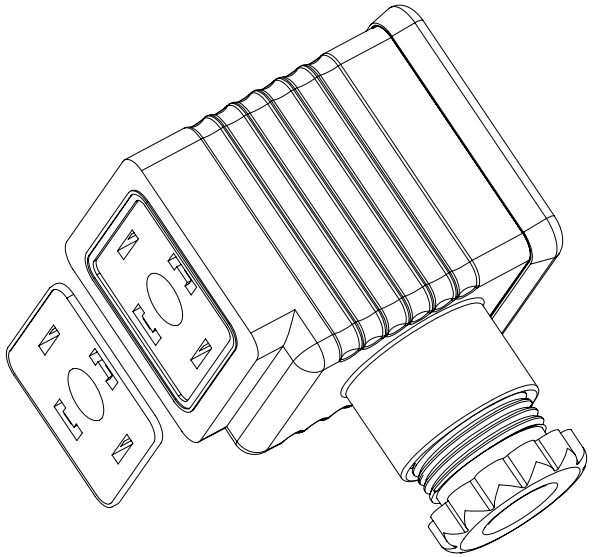

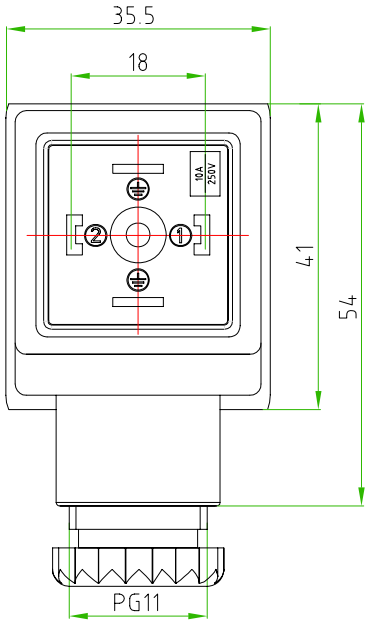

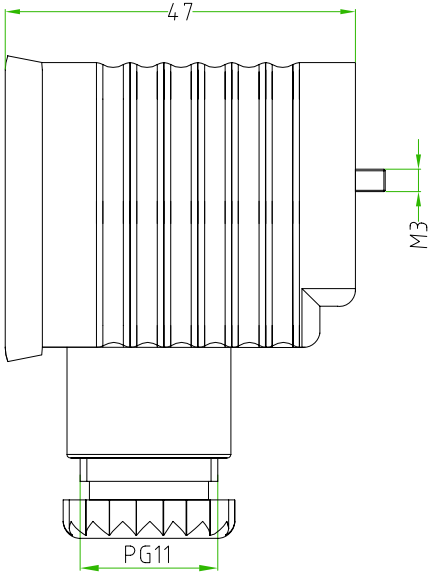

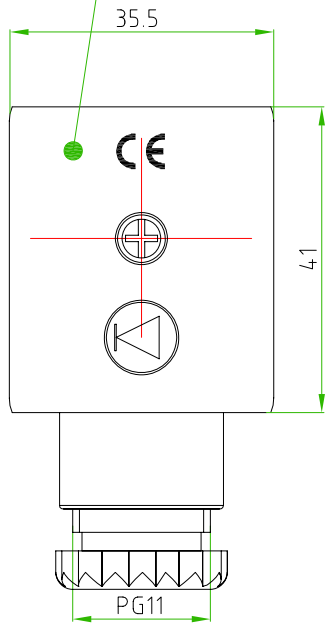

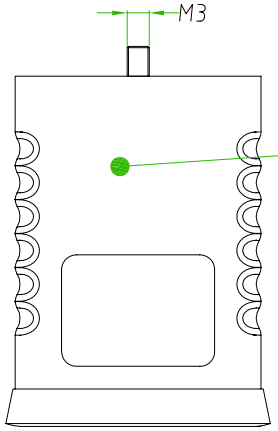

PLEASE NOT SILK PRINTED
THE ELECTRICAL SCHEME

CONNECTOR FEATURES	
HOUSING COLOUR	BLACK
HIGH HOUSING	47mm
TYPE CONTACTS	SCREW
CONTACT SPACING	18mm
NUMBER OF POLES	2POLES+EARTH
EARTH POSITIONING	H.6/12
CABLE EXIT	PG9/PG11 UNIFIED
MAXIMUM CONDUCTOR SIZE	1,5mm
FIXING SCREW	M3X40
FLAT GASKET	NBR
PROTECTION CLASS	IP67
CIRCUIT TYPE	BRIDGE RECTIFIER+CONDENSER+VDR+RESISTANCE
VOLTAGE	230V AC
CONNECTOR WITHOUT H.T.P.LOGO	

TOLLERANZE ±0.2		DISEGNATORE LORENZO CIMMINO	DATA 26-03-12	SCALA 1 : 1		PESO
U.d.M	ANGOLO	CONTROLLATO MARCO MAZZOLINI				
DESCRIZIONE: CONNECTOR DIN43650/A,G4 SERIES,CONTACT SPACING,18mm,2P+E(H.6/12) BLACK HOUSING,WITH BRIDGE RECTIFIER+CONDENSER+VDR+RESISTANCE 230V,PG9/PG11 UNIFIED			TIPO G4			MATERIALE
High Tech Products HTP H.T.P. HIGH TECH PRODUCTS			CODICE G4NU2CR3-G			