CONNECTOR FEATURES	
HOUSING COLOUR	BLACK WITH TRANSPARENT COVER
HIGH HOUSING	47mm
TYPE CONTACTS	SCREW WITH CONDUCTOR PROTECTION
CONTACT SPACING	18mm
NUMBER OF POLES	3POLES+EARTH(H.6/12)
EARTH POSITIONING	H.6
CABLE EXIT	PG9/PG11 UNIFIED
MAXIMUM CONDUCTOR SIZE	1,5mm
FIXING SCREW	M3X42
FLAT GASKET	NBR
PROTECTION CLASS	IP65
CIRCUIT TYPE	WITH BRIDGE RECTIFIER+VARISTOR+RED LED
VOLTAGE	230V
RATED CURRENT	3A

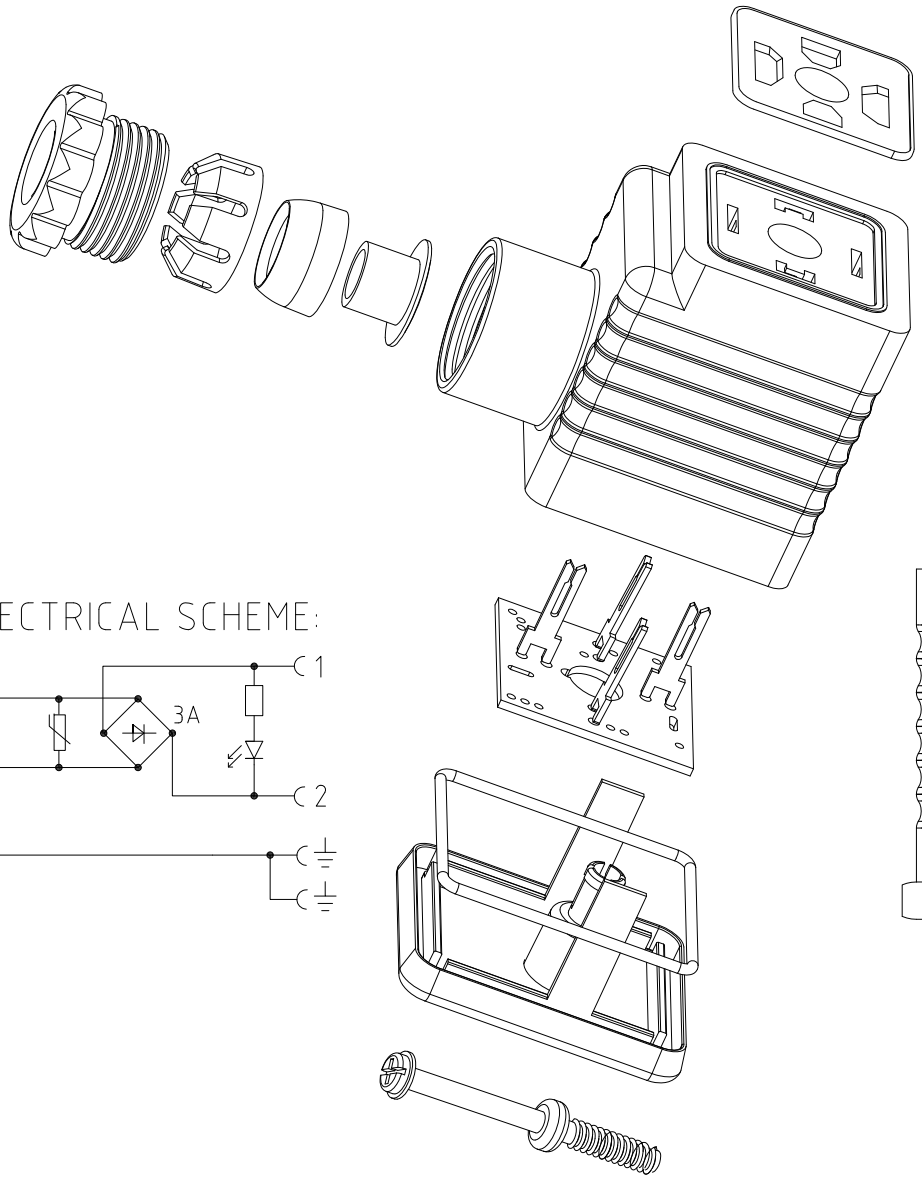

ELECTRICAL SCHEME:

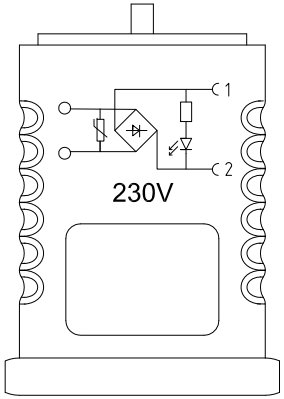

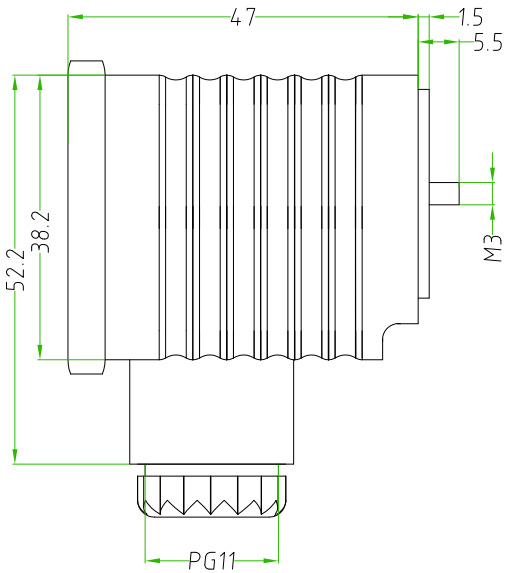

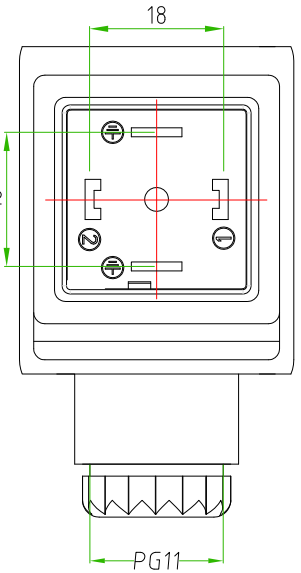

TOLLERANZE ±0,2		DISEGNATORE LORENZO CIMMINO	DATA 20-05-15	SCALA 1 : 1		PESO
U.d.M	ANGOLO	CONTROLLATO				
DESCRIZIONE: CONNECTOR DIN43650/A,G4 SERIES,CONTACT SPACING,18mm,2P+E(h.6/12), BLACK HOUSING,WITH BRIDGE RECTIFIER+VARISTOR+RED LED,230V,3A, PG9/PG11 UNIFIED				TIPO: G4		MATERIALE
H.T.P. HIGH TECH PRODUCTS				CODICE: G4TU2RL3-3A		