

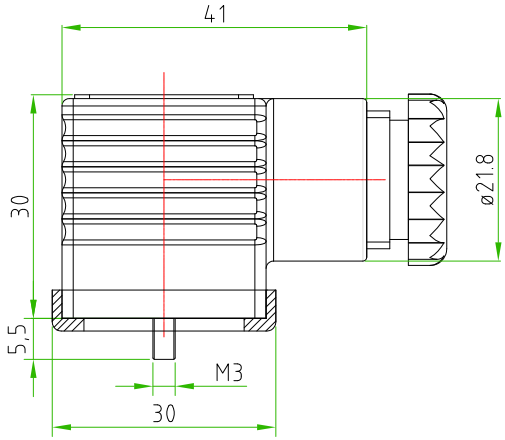

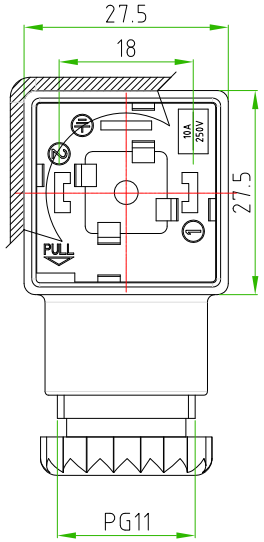

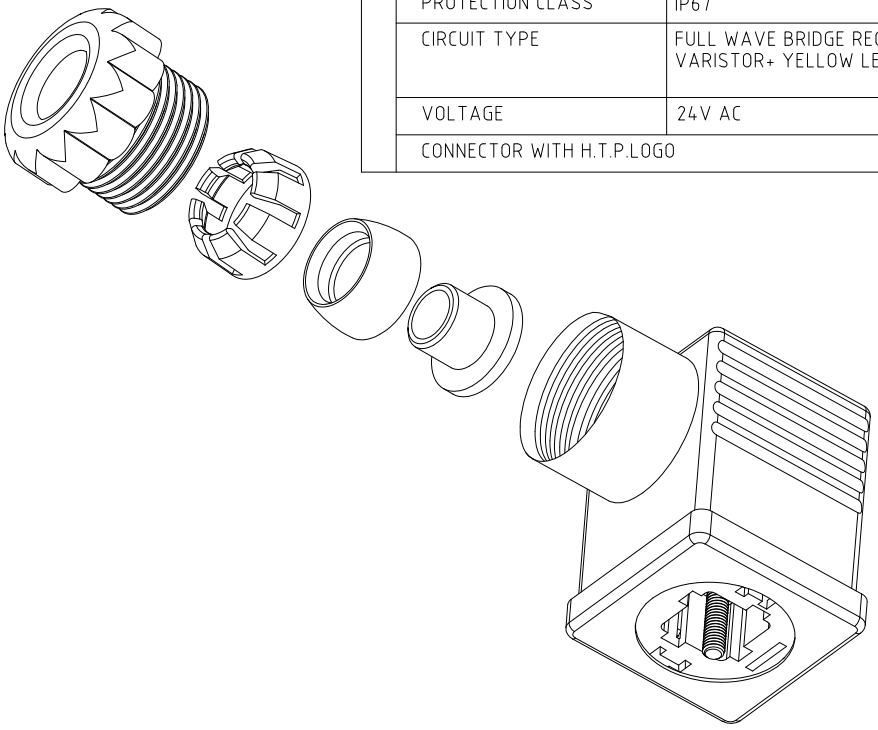

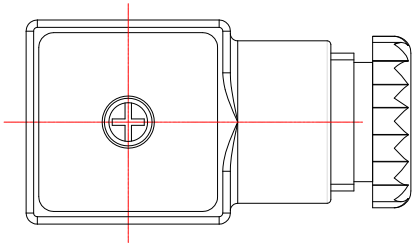

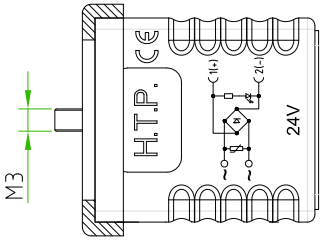

CONNECTOR FEATURES	
PRODUCT TYPE	DIN43650/A CONNECTOR FIELD ATTACHABLE
HOUSING COLOUR	TRANSPARENT
HEIGHT HOUSING	30mm
TYPE CONTACTS	SCREW WITH CONDUCTOR PROTECTION
CONTACT SPACING	18mm
NUMBER OF POLES	2POLES+EARTH
EARTH POSITIONING	H.12
CABLE EXIT	PG9/PG11 UNIFIED
SUITABLE CABLE	FROM ø6mm TO ø11mm
MAXIMUM CONDUCTOR SIZE	1,5mm
FIXING SCREW	M3X32,5
PROFILED GASKET	NBR
PROTECTION CLASS	IP67
CIRCUIT TYPE	FULL WAVE BRIDGE RECTIFIER + VARISTOR+ YELLOW LED
VOLTAGE	24V AC
CONNECTOR WITH H.T.P.LOGO	

TOLLERANZE ±0,2		DISEGNATORE LORENZO CIMMINO	DATA 22-01-14	SCALA 1 : 1		PESO
U.d.M	ANGOLO	CONTROLLATO				
DESCRIZIONE CONNECTOR DIN43650/A,G1 SERIES,CONTACT SPACING,18mm,2P+E, TRANSPARENT HOUSING,WITH VARISTOR+BRIDGE RECTIFIER+YELLOW LED, 24V,PG9/PG11 UNIFIED.CONNECTOR WITH H.T.P.LOGO			TIPO G1			MATERIALE
H.T.P. HIGH TECH PRODUCTS			CODICE G1TU2RG1			