

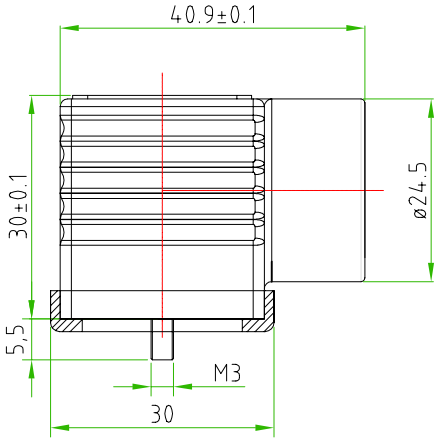

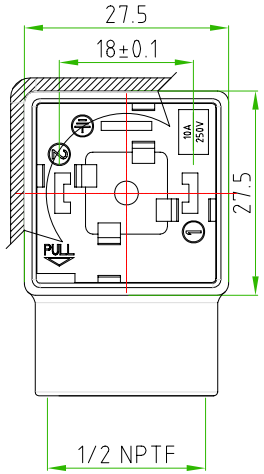

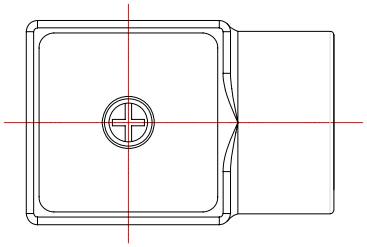

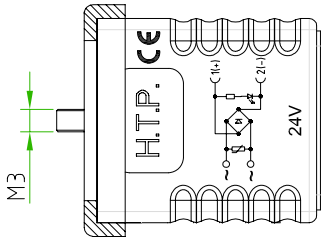

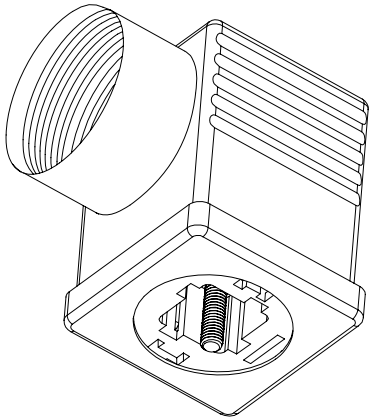

CONNECTOR FEATURES	
PRODUCT TYPE	DIN43650/A CONNECTOR FIELD ATTACHABLE
HOUSING COLOUR	TRANSPARENT
HIGH HOUSING	30mm
TYPE CONTACTS	SCREW WITH CONDUCTOR PROTECTION
CONTACT SPACING	18mm
NUMBER OF POLES	2POLES+EARTH
CABLE EXIT	1/2NPTF
MAXIMUM CONDUCTOR SIZE	1,5mm
FIXING SCREW	M3X32,5
PROFILED GASKET	NBR
PROTECTION CLASS	IP67
CIRCUIT TYPE	FULL WAVE BRIDGE RECTIFIER + VARISTOR+ RED LED
VOLTAGE	24V AC

TOLLERANZE		DISEGNATORE LORENZO CIMMINO	DATA 26-02-08	SCALA 1 : 1		PESO
U.d.M	ANGOLO	CONTROLLATO				
DESCRIZIONE CONNECTOR DIN43650/A,G1 SERIES,CONTACT SPACING,18mm,2P+E, TRANSPARENT HOUSING,WITH VARISTOR+BRIDGE RECTIFIER+RED LED, 24V,1/2NPTF			TIPO G1			MATERIALE
H.T.P. HIGH TECH PRODUCTS			CODICE G1TF2RL1			