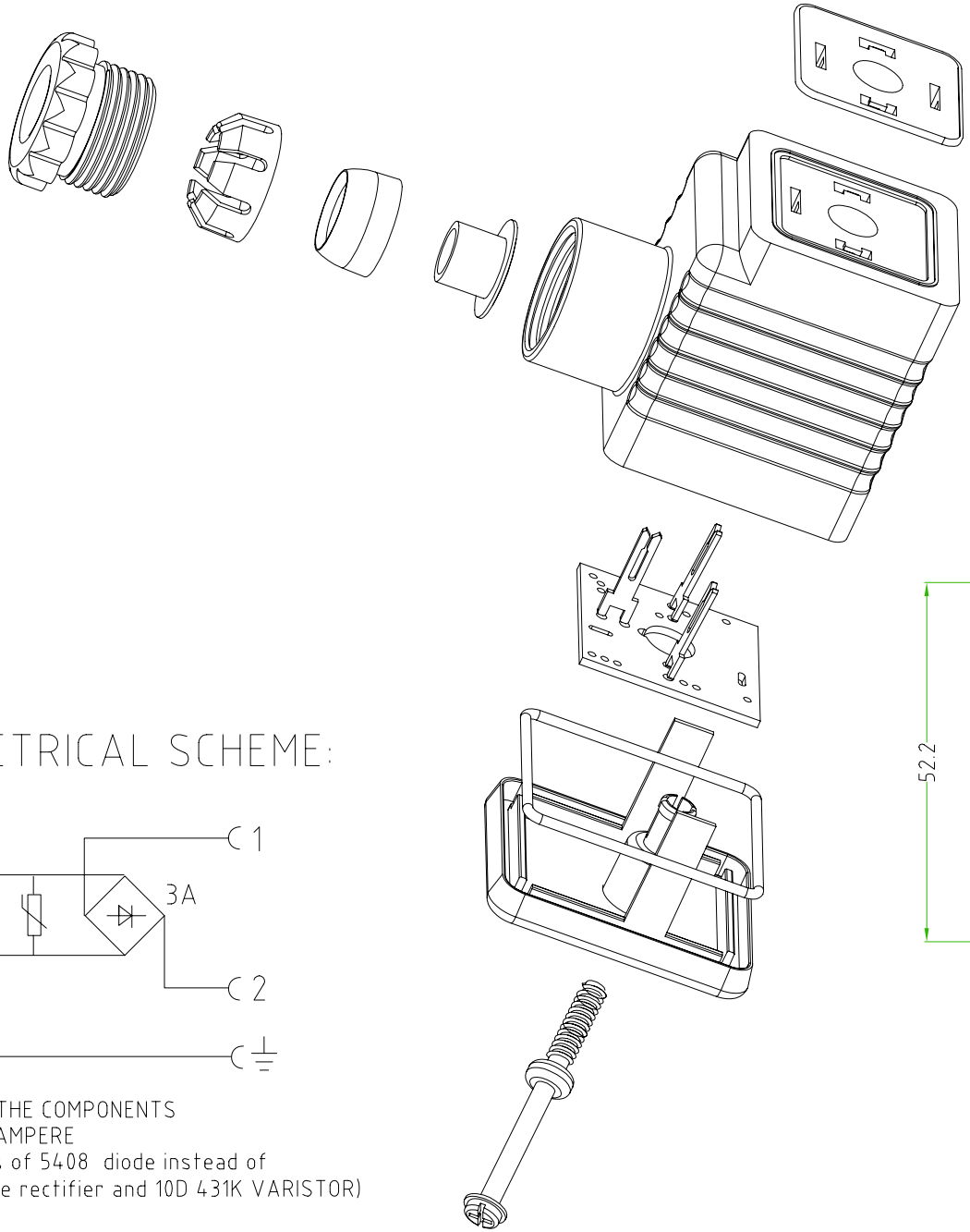

CONNECTOR FEATURES	
HOUSING COLOUR	BLACK
HIGH HOUSING	47mm
TYPE CONTACTS	SCREW WITH CONDUCTOR PROTECTION
CONTACT SPACING	18mm
NUMBER OF POLES	3POLES+EARTH(H.6)
CABLE EXIT	PG9/PG11 UNIFIED
MAXIMUM CONDUCTOR SIZE	1,5mm
FIXING SCREW	M3X42
FLAT GASKET	NBR
PROTECTION CLASS	IP65
CIRCUIT TYPE	WITH BRIDGE RECTIFIER AND VARISTOR
VOLTAGE	230V
AMPERAGE	3A

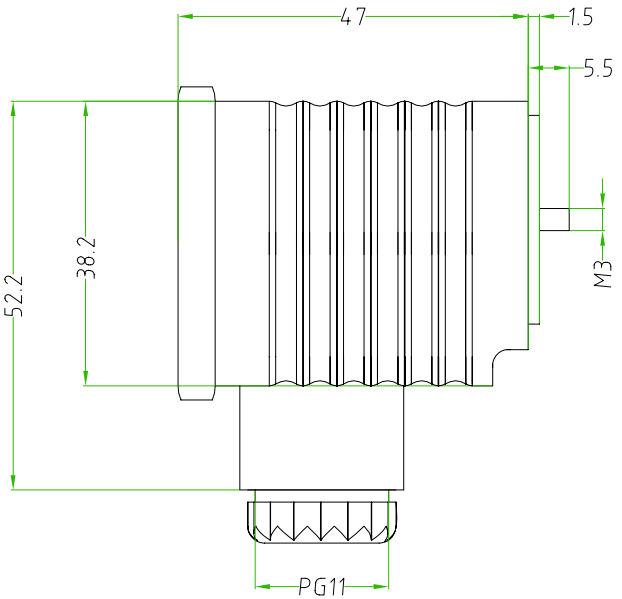

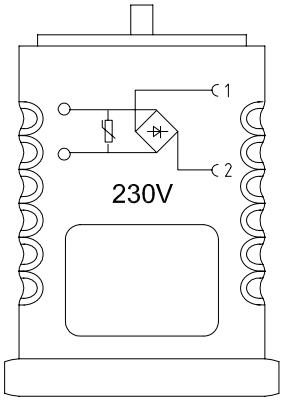

ELECTRICAL SCHEME:

USE THE COMPONENTS
OF 3AMPERE
(4pcs of 5408 diode instead of
bridge rectifier and 10D 431K VARISTOR)

TOLLERANZE		DISEGNATORE LORENZO CIMMINO	DATA 01-06-11	SCALA 1 : 1	PESO
U.d.M	ANGOLO	CONTROLLATO			
DESCRIZIONE: CONNECTOR DIN43650/A,G4 SERIES,CONTACT SPACING,18mm,2P+E, BLACK HOUSING,WITH BRIDGE RECTIFIER AND VARISTOR,230V,3A, PG9/PG11 UNIFIED			TIPO: G4		MATERIALE
H.T.P. HIGH TECH PRODUCTS			CODICE: G4NU2RV3-3A		