Rev.	Modify	Date	Firma	Approved

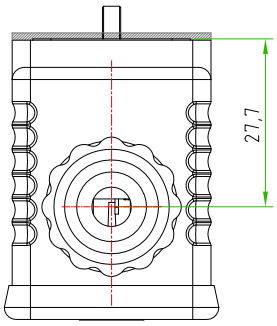

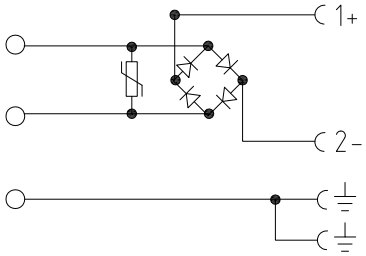

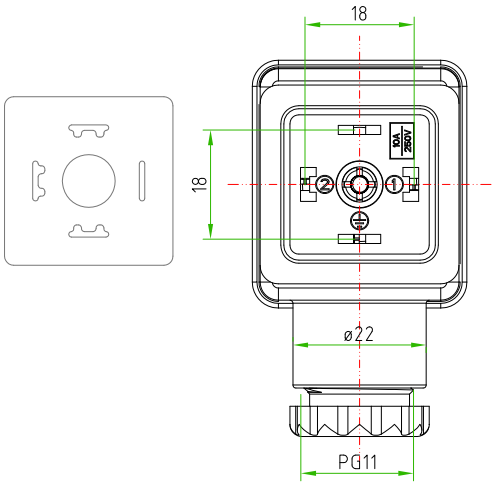

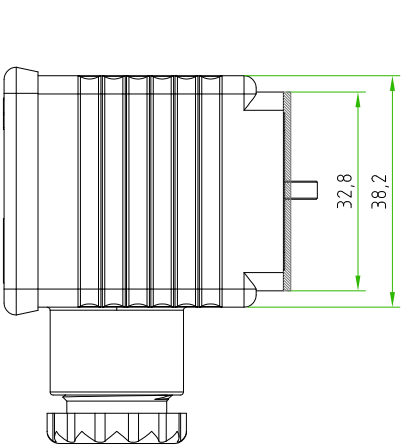

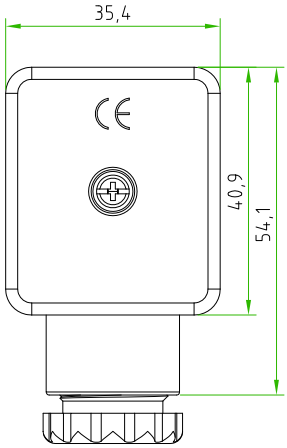

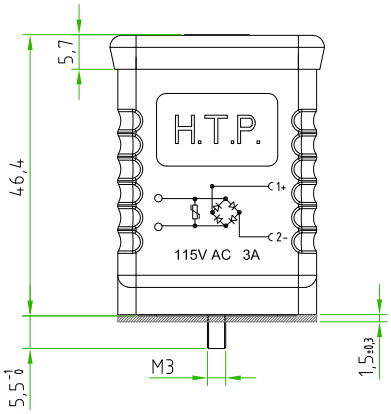

CONNECTOR FEATURES		
	PRODUCT TYPE	EN175301-803 INDUSTRY STANDARD FORM A; FIELD ATTACHABLE
	HOUSING COLOUR	BLACK
	COVER COLOUR	BLACK
	PRESS-CABLE COLOUR	BLACK
	HEIGHT HOUSING	46,4mm
	CONTACTS SPACING	18mm
	CONTACTS TYPE	TOWER CONTACTS
	NUMBER OF POLES	2POLES+2EARTHS
	EARTH POSITIONING	H.6-12
	CABLE EXIT	PG9/11 UNIFIED
	SUITABLE CABLE	FROM ø6mm TO ø10mm
	PROTECTION CLASS	IP65(EN60529)
	CIRCUIT TYPE	WITH BRIDGE RECTIFIER+VARISTOR USE THE COMPONENTS OF 3A n°4 DIODES 5408 n°1 VARISTOR 10D201K
	RATED VOLTAGE	115AC
	RATED CURRENT	3A
	GASKET TYPE	NBR FLAT (CODE:10001400A)
	FIXING SCREW	M3X0,5 L=41,5mm (CODE:10001500F)
	CONNECTOR TEMPERATURE RANGE	from -20°C to +90°C
	MAX.CONDUCTOR SIZE	1,5mm²
	CONNECTOR WITH H.T.P.LOGO	

Rev.	Modify	Date	Firma	Approved

Rev.	Modify	Date	Signed	Approved

CUSTOMER APPROVAL

SIGNATURE	DATE

PLEASE SIGN AND RETURN

Designer	SUGLIANI R.	Date 2018-04-27	Tollerance ±0,2	Units: mm	Series EN175301-803 (form A)	Drawing n. 1/1
Approved	CIMMINO L.	Date 2018-04-27	Scale TO FIT	Size: A4	Customer code:	

A4

HTP™ High Tech Products S.R.L.

DESCRIPTION

SQUARE CONNECTOR EN175301-803 FORM A,FIELD ATTACHABLE,2P.+PE,BLACK, WITH BLACK COVER,BRIDGE RECTIFIER(4DIODES)+VARISTOR,115V AC,3A, PG9/11 unified.CONNECTOR WITH H.T.P. LOGO

H.T.P.PART NUMBER

G4NU2RV2-3A

H.T.P. High Tech Products S.R.L. Via Lesina,45 -24030- Brembate di Sopra (Bg) - ITALY Phone:+39.035692509 Fax:+39.035203291 E-mail: info@webhtp.eu Web: http://www.webhtp.eu/

ALL RIGHTS ARE RESERVED.