

CONNECTOR FEATURES	
PRODUCT TYPE	DIN43650/A CONNECTOR FIELD ATTACHABLE
HOUSING COLOUR	BLACK
HIGH HOUSING	30mm
TYPE CONTACTS	SCREW WITH CONDUCTOR PROTECTION
CONTACT SPACING	18mm
NUMBER OF POLES	2POLES+EARTH
EARTH POSITIONING	H.12
CABLE EXIT	1/2" NPTF
MAXIMUM CONDUCTOR SIZE	1,5mm
FIXING SCREW	M3X0,5 L=32,5mm
PROFILED GASKET	NBR
PROTECTION CLASS	IP67
CIRCUIT TYPE	FULL WAVE BRIDGE RECTIFIER + VARISTOR
VOLTAGE	115V AC
CONNECTOR WITH H.T.P.LOGO	

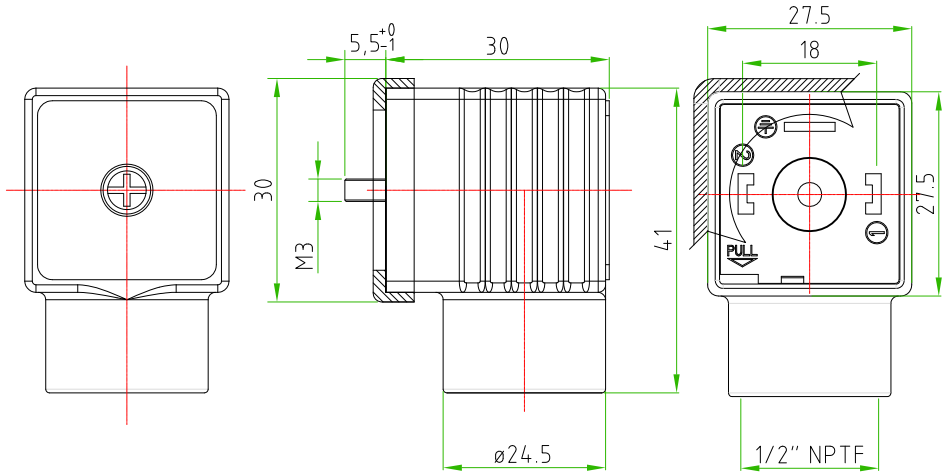

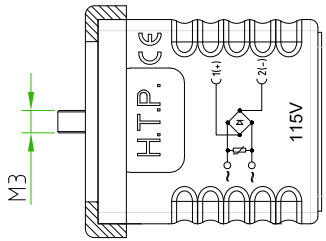

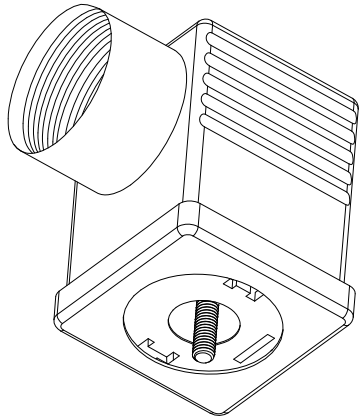

TOLLERANZE ±0.3		DISEGNATORE ROBERTO SUGLIANI	DATA 20-09-2016	SCALA 1 : 1		PESO
U.d.M	ANGOLO	CONTROLLATO				
DESCRIZIONE CONNECTOR DIN43650/A,G1 SERIES,CONTACT SPACING,18mm,2P+E, BLACK HOUSING,WITH VARISTOR+BRIDGE RECTIFIER,115V, 1/2" NPTF CONNECTOR WITH H.T.P.LOGO			TIPO G1			MATERIALE
H.T.P. HIGH TECH PRODUCTS			CODICE G1NF2RV2			