

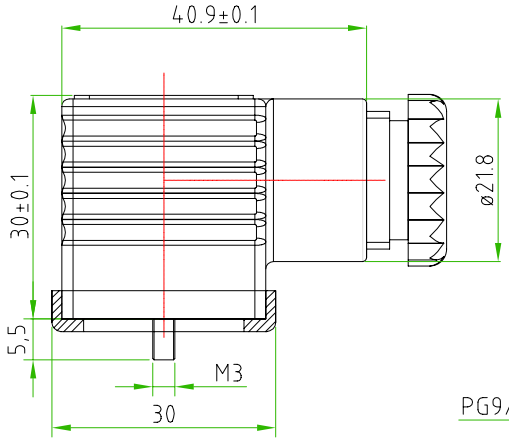

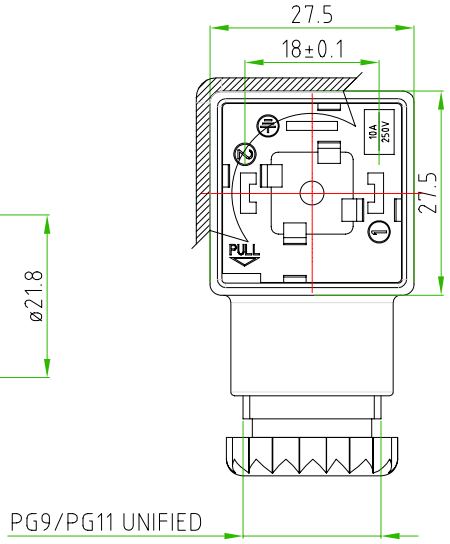

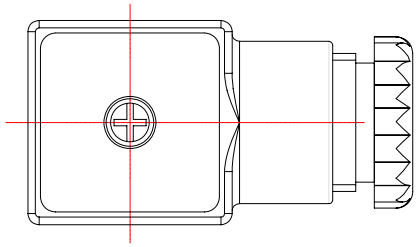

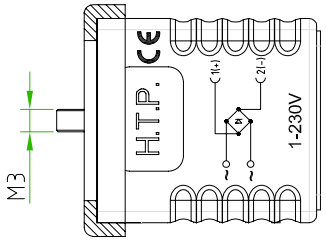

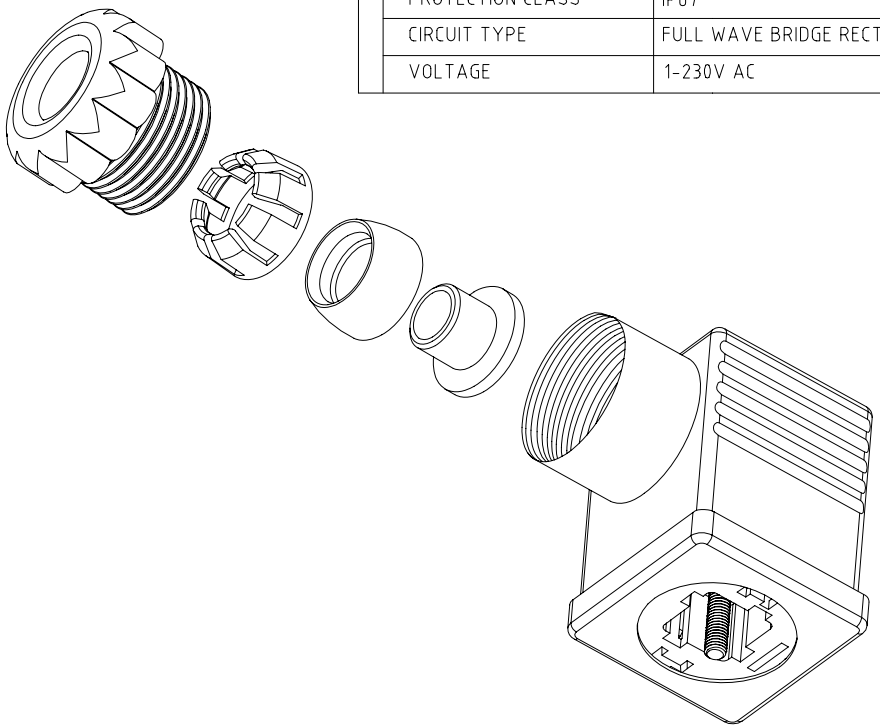

CONNECTOR FEATURES	
PRODUCT TYPE	DIN43650/A CONNECTOR FIELD ATTACHABLE
HOUSING COLOUR	GREY
HIGH HOUSING	30mm
TYPE CONTACTS	SCREW WITH CONDUCTOR PROTECTION
CONTACT SPACING	18mm
NUMBER OF POLES	2POLES+EARTH
CABLE EXIT	PG9/PG11 UNIFIED
MAXIMUM CONDUCTOR SIZE	1,5mm
FIXING SCREW	M3X32,5
PROFILED GASKET	NBR
PROTECTION CLASS	IP67
CIRCUIT TYPE	FULL WAVE BRIDGE RECTIFIER
VOLTAGE	1-230V AC

TOLLERANZE		DISEGNATORE LORENZO CIMMINO	DATA 26-02-08	SCALA 1 : 1	PESO
U.d.M	ANGOLO	CONTROLLATO			
DESCRIZIONE CONNECTOR DIN43650/A,G1 SERIES,CONTACT SPACING,18mm,2P+E, GREY HOUSING,BRIDGE RECTIFIER,1-230V,PG9-11 UNIFIED			TIPO G1		MATERIALE
H.T.P. HIGH TECH PRODUCTS			CODICE G1GU2R03		