Rev.	Modify	Date	Firma	Approved

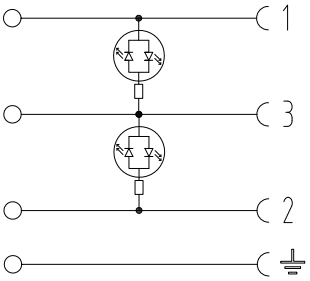

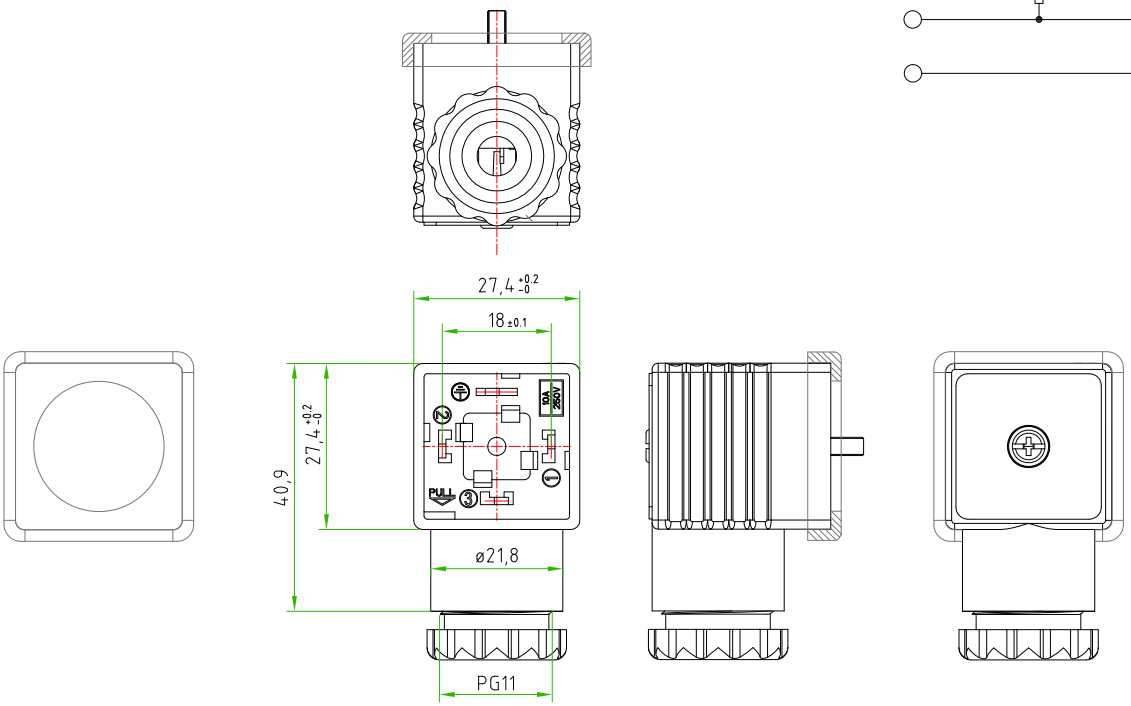

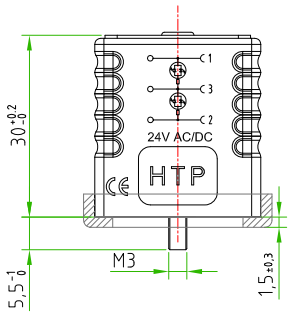

CONNECTOR FEATURES	
PRODUCT TYPE	EN175301-803 FORM A FIELD ATTACHABLE.
HOUSING MATERIAL/COLOUR	PA66 /TRANSPARENT
PRESS-CABLE MATERIAL/COLOUR	PA66 /BLACK
INTRENAL CORE MATERIAL/COLOUR	PA66 /BLACK
HEIGHT HOUSING	30mm
CONTACTS SPACING	18mm
CONTACTS TYPE	SCREW CONTACTS(with protection plate)
NUMBER OF POLES	3POLES+EARTH
EARTH POSITIONING	H.12 (TURNABLE)
CABLE EXIT	PG9/11 UNIFIED
SUITABLE CABLE	FROM ø6mm TO ø10mm
MAX.CONDUCTOR SIZE	1,5mm²
PROTECTION CLASS	IP67
CIRCUIT TYPE	n°2 BIPOLAR RED LED
RATED VOLTAGE	24V AC/DC
CONNECTOR TEMPERATURE RANGE	from -40°C to +90°C
GASKET TYPE	PROFILED NBR
FIXING SCREW	M3X0,5 L=32,5mm
CONNECTOR WITH H.T.P. LOGO	

CUSTOMER APPROVAL	
SIGNATURE	DATE
PLEASE SIGN AND RETURN	

Rev.	Modify	Date	Signed	Approved

A4

Designer	SUGLIANI R.	Date 2016-12-12	Tollerance ±0,2	Units: mm	Series EN175301-803 (form A)	Drawing n. 1-1
Approved	CIMMINO L.	Date 2016-12-12	Scale 1:1	Size: A4	Customer code:	

HTP™ High Tech Products S.R.L.

DESCRIPTION

SQUARE CONNECTOR EN175301-803 FORM A,FIELD ATTACHABLE,3P.+PE, WITH N°2 BIPOLAR RED LED,24V AC/DC,TRANSPARENT HOUSING, PG9/11 unified. CONNECTOR WITH H.T.P. LOGO.

H.T.P.PART NUMBER

G1TU3L21-2L

H.T.P. High Tech Products S.R.L. Via Lesina,45 -24030- Brembate di Sopra (Bg) - ITALY Phone:+39.035692509 Fax:+39.035203291 E-mail: info@webhtp.eu Web: http://www.webhtp.eu/

ALL RIGHTS ARE RESERVED.