

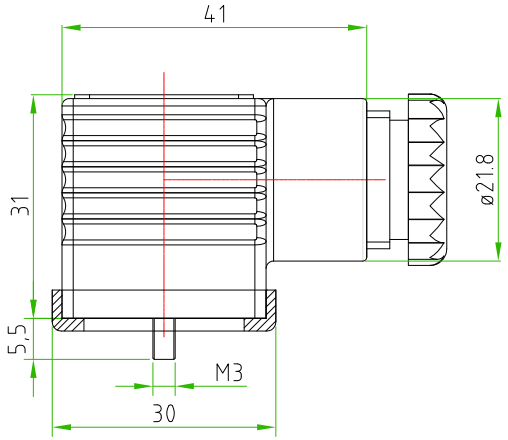

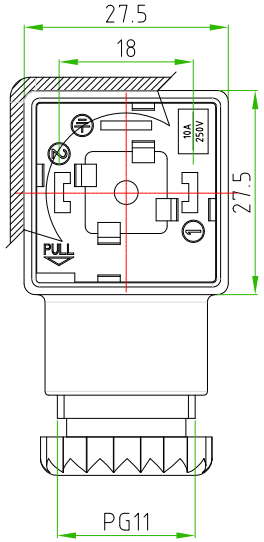

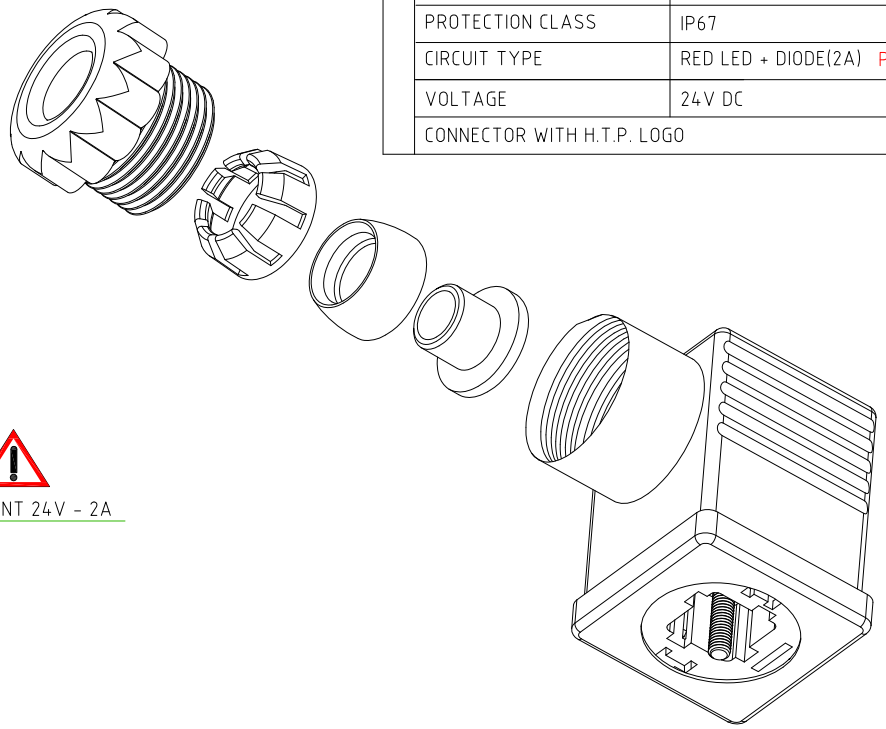

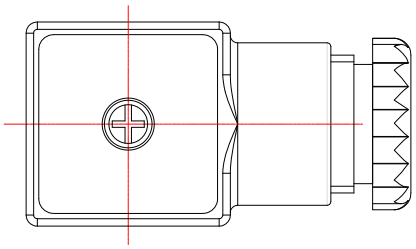

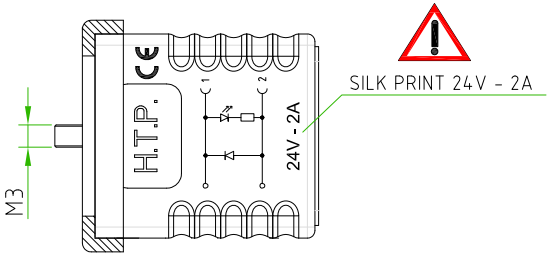

CONNECTOR FEATURES		
	PRODUCT TYPE	DIN43650/A CONNECTOR FIELD ATTACHABLE
	HOUSING COLOUR	TRANSPARENT
	HEIGHT HOUSING	30mm
	TYPE CONTACTS	SCREW WITH CONDUCTOR PROTECTION
	CONTACT SPACING	18mm
	NUMBER OF POLES	2POLES+EARTH
	EARTH POSITIONING	H.12
	CABLE EXIT	PG9/PG11 UNIFIED
	SUITABLE CABLE	FROM 6mm TO 11mm
	MAXIMUM CONDUCTOR SIZE	1,5mm
	FIXING SCREW	M3X32,5
	PROFILED GASKET	NBR
	PROTECTION CLASS	IP67
	CIRCUIT TYPE	RED LED + DIODE(2A) PAY ATTENTION
	VOLTAGE	24V DC
	CONNECTOR WITH H.T.P. LOGO	

TOLLERANZE ±0.2		DISEGNATORE LORENZO CIMMINO	DATA 12-12-12	SCALA 1 : 1		PESO
U.d.M	ANGOLO	CONTROLLATO				
DESCRIZIONE CONNECTOR DIN43650/A,G1 SERIES,CONTACT SPACING,18mm,2P+E, TRANSPARENT HOUSING,WITH LED RED+DIODE(2A),24V,PG9/11 UNIFIED.CONNECTOR WITH H.T.P.LOGO			TIPO G1			MATERIALE
H.T.P. HIGH TECH PRODUCTS			CODICE G1TU2DL1-2A			