

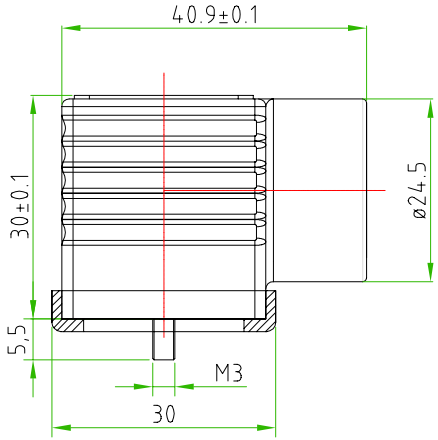

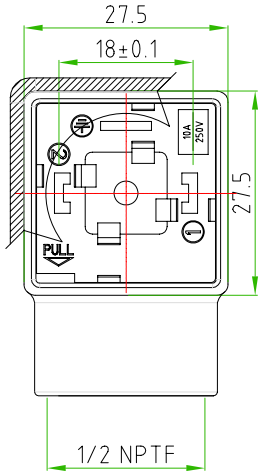

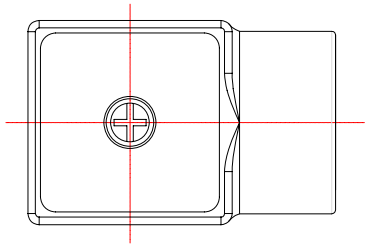

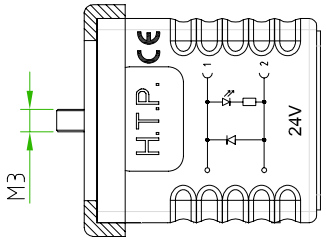

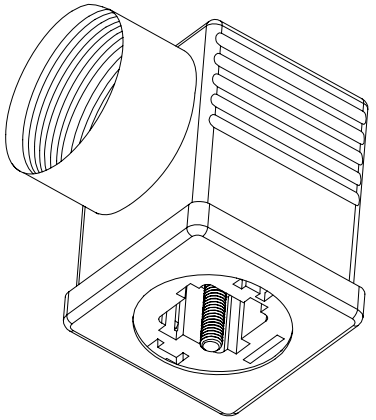

CONNECTOR FEATURES	
PRODUCT TYPE	DIN43650/A CONNECTOR FIELD ATTACHABLE
HOUSING COLOUR	TRANSPARENT
HIGH HOUSING	30mm
TYPE CONTACTS	SCREW WITH CONDUCTOR PROTECTION
CONTACT SPACING	18mm
NUMBER OF POLES	2POLES+EARTH
CABLE EXIT	1/2 NPTF
MAXIMUM CONDUCTOR SIZE	1,5mm
FIXING SCREW	M3X32,5
PROFILED GASKET	NBR
PROTECTION CLASS	IP67
CIRCUIT TYPE	RED LED + DIODE(1A)
VOLTAGE	24V DC

TOLLERANZE		DISEGNATORE LORENZO CIMMINO	DATA	SCALA		PESO
U.d.M	ANGOLO	CONTROLLATO	20-12-10	1 : 1		
DESCRIZIONE: CONNECTOR DIN43650/A,G1 SERIES,CONTACT SPACING,18mm,2P+E, TRANSPARENT HOUSING,WITH LED RED+DIODE,24V,1/2NPTF			TIPO: G1			MATERIALE
High Tech Products HTP H.T.P. HIGH TECH PRODUCTS			CODICE: G1TF2DL1			