A-LAS Series

SI-CON8-FIO Electronic control unit

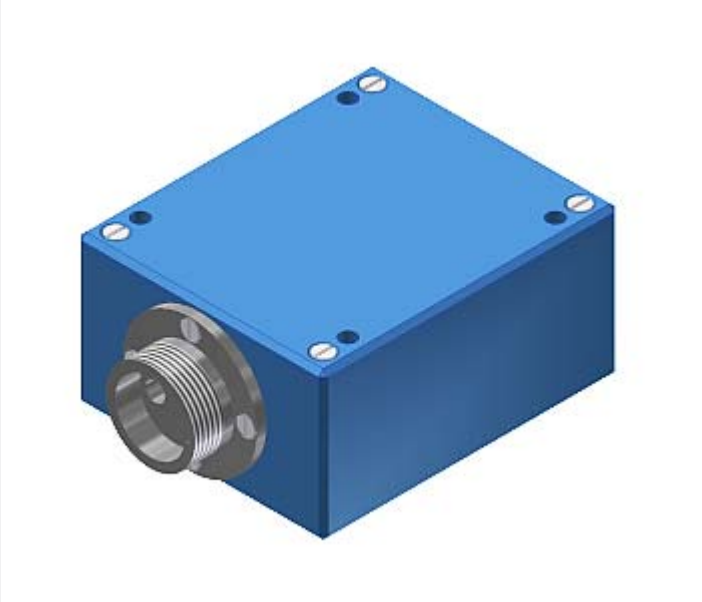

- Electronic control unit for use with fiber optics of FIO series (reflected light and transmitted light fiber optics)
- 100% check of objects (tolerance band monitoring)
- Positioning and thickness check of objects (in µm range)
- High trigger accuracy (in µm range)
- High switching frequency (typ. 30 kHz)
- RS232 interface (USB- and Ethernet converter available)
- Parameterizable under Windows®
- Threshold correction can be activated via software
- Adjustment of trigger threshold and tolerance band via software
- Output polarity can be switched via software
- Dirt accumulation compensation
- Sturdy metal housing

Design

Product name:

SI-CON8-FIO
(incl. Windows® PC software SI-CON8-Scope)

Accessories: (p. 7-12)

Fiber optics
Attachment optics
Fiber optics mounting

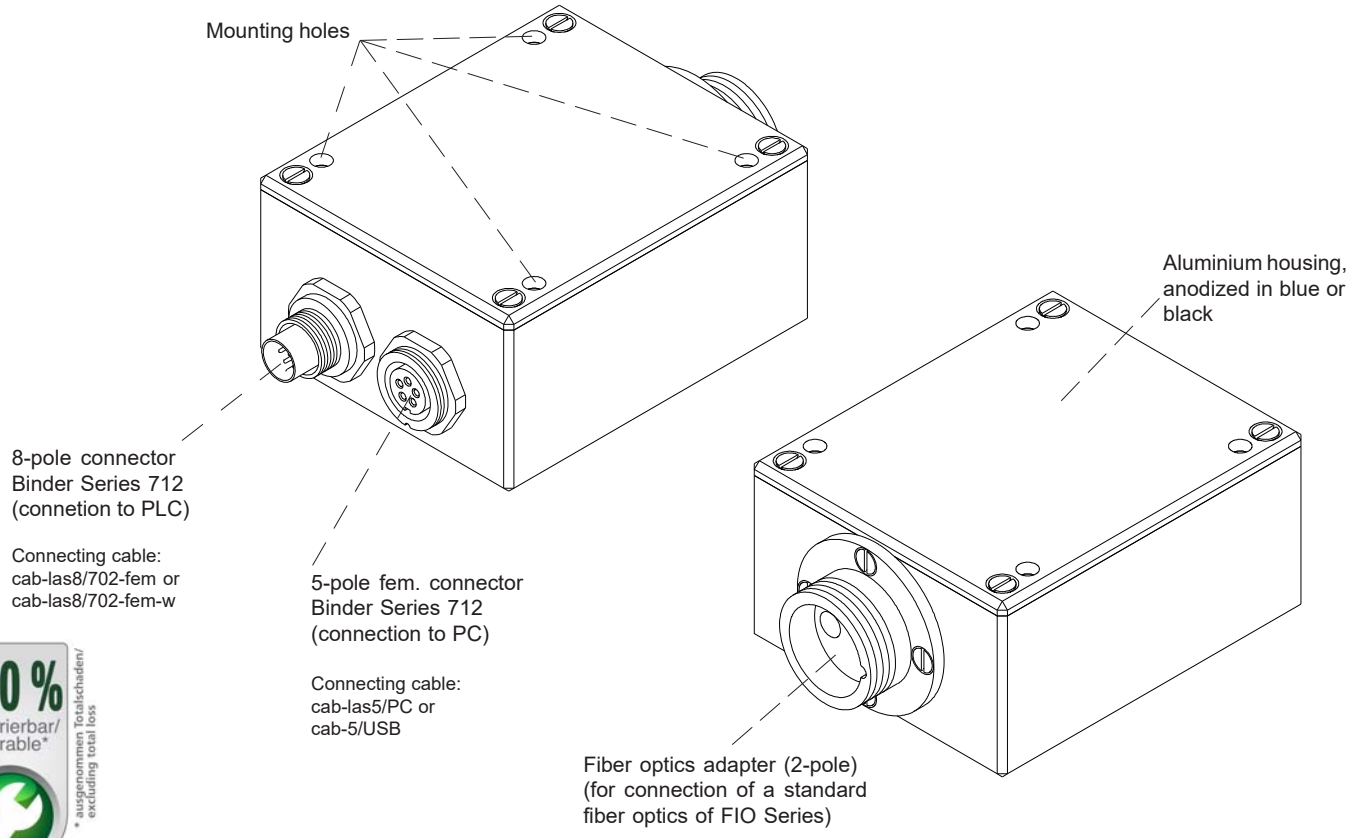

100 % reparierbar/ reparable* * ausgenommen Totalschaden/ excluding total loss

Technical Data

Model	SI-CON8-FIO
Voltage supply	+24VDC (± 10%), reversed-polarity protected, overload protected
Current consumption	max. 150 mA
Min. detectable object	depends on the cross section of the fiber optics used
Resolution	depends on the fiber optics used
Operating temperature range	-20°C ... +55°C
Storage temperature range	-20°C ... +85°C
Enclosure rating	IP64
Threshold correction	can be activated via PC
ANALOG output	0V ... 10V
DIGITAL output	adjustable via PC: Qinv: NPN bright-switching (NPN normally closed) / PNP dark-switching PNP normally open) Q: NPN dark-switching (NPN normally open) / PNP bright-switching (PNP normally closed)
Current control input (I-CONTROL)	Laser power adjustable via PC
Type of connector	Connection to PLC: 8-pole connector Binder Series 712 Connection to PC: 5-pole fem. connector Binder Series 712 Connection to fiber optics: 2-pole fiber optics adaptor
Connecting cables	Connection to PLC: cab-las8/702-fem Connection PC: cab-las5/PC or cab-5/USB or cab-5/ETH
Dynamic switching output (pulse lengthening)	can be activated via PC (0ms ... 100ms)
Switching frequency	typ. 30 kHz
Max. switching current	100 mA, short-circuit proof
Band width (analog signal)	1 kHz (-3 dB)
Scan frequency	max. 200 kHz
Interface	RS232, parameterisable under Windows®
Housing material	Aluminium, anodized in blue or black
Housing dimensions	LxWxH approx. 60 mm x 50 mm x 22 mm (without connector flanges)
EMC test acc. to	DIN EN 60947-5-2 CE

Dimensions

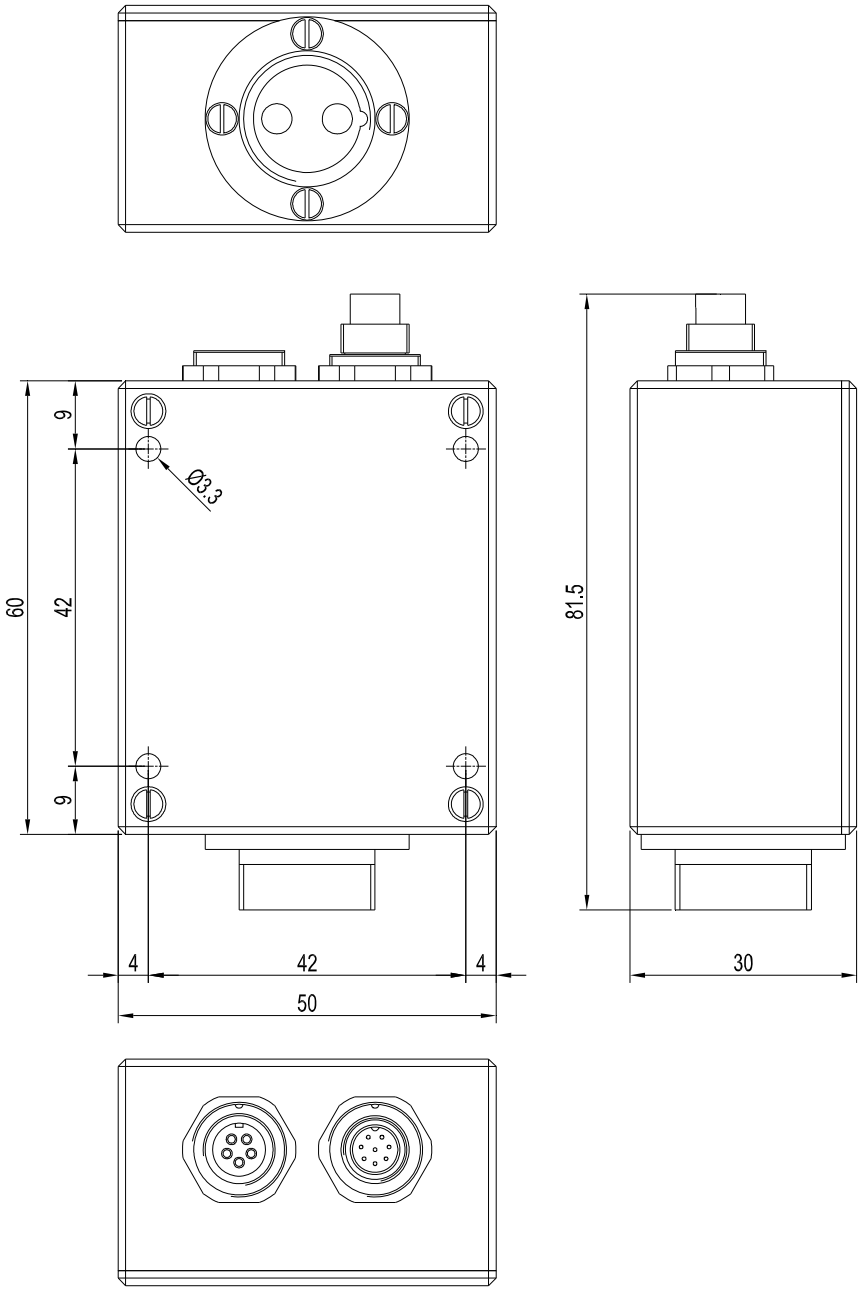

All dimensions in mm

Connector Assignment

Connection SI-CON8-FIO to PLC:
8-pole connector Binder Series 712

Pin:	Wire color:	Assignment:
1	white	GND (0V)
2	brown	+Ub (+24VDC ± 10%)
3	green	IN0
4	yellow	OUT0 (Digital 0: Type 0 ... 1V, Digital 1: Type +Ub - 10%)
5	grey	not connected
6	pink or black	ANALOG (0V ... +10V)
7	blue	not connected
8	red	not connected

Connecting cable:
cab-las8/702-fem-(*length*) or
cab-las8/702-fem-w-(*length*) (angle type 90°)
(standard length 2m, available up to length 25m)

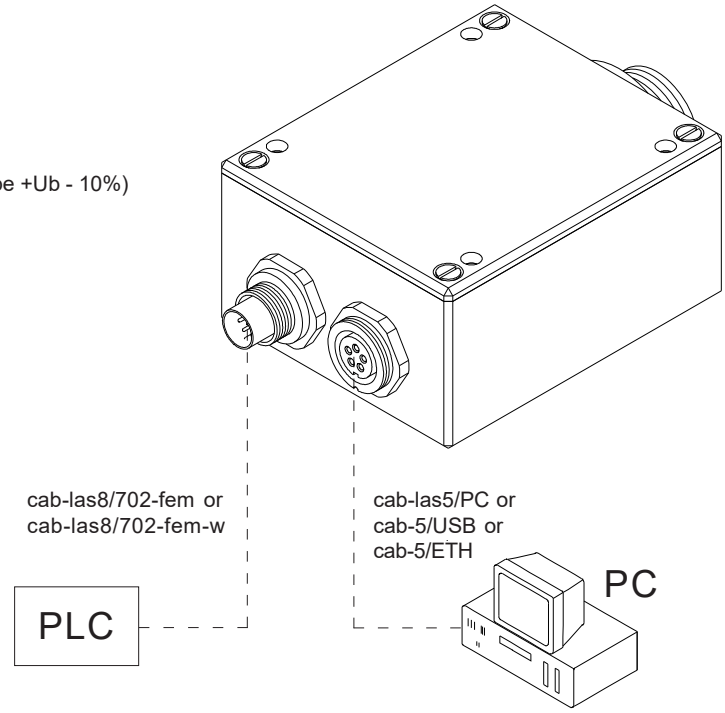

Connection SI-CON8-FIO to PC:
5-pole fem. connector Binder Series 712

Pin:	Assignment:
1	0V (GND)
2	TxD
3	RxD
4	+24VDC (+Ub, OUT)
5	not connected

Connecting cable:
cab-las5/PC-(*length*) or
cab-las5/PC-w-(*length*) (angle type 90°)
(standard length 2m, also available: length 5m)

alternative:
Connection via USB-interface at PC:
Connecting cable (incl. driver software):
cab-5/USB-(*length*) or
cab-5/USB-w-(*length*) (angle type 90°)
(standard length 2m, also available: length 0.5m, 1m)

alternative:
Connection to local network via Ethernet bus:
Adapter (incl. software „SensorFinder“):
cab-4/ETH-500
(standard length 0.5m)

Optional: External CAT5 cable, e.g.
cab-eth/M12D-RJ45-flx-(length)

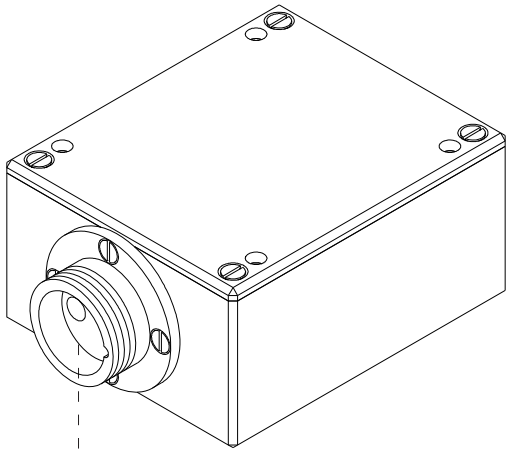

ConnectionSI-CON8-FIO to fiber optics:
2-pole fiber optics adapter

Connection of a standard fiber optics of FIO Series
(cf. pages 7 and 8)

Standard fiber optics
of FIO Series

Connecting Cables

Connection of SI-CON8-FIO to PLC:

Connecting cable:
cab-las8/702-fem-...
cab-las8/702-fem-w-...

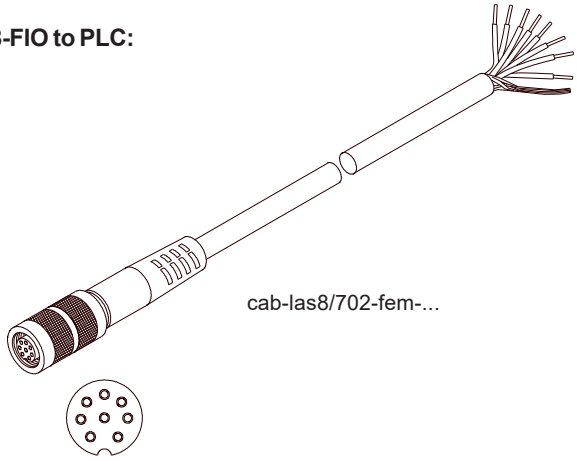

cab-las8/702-fem-...

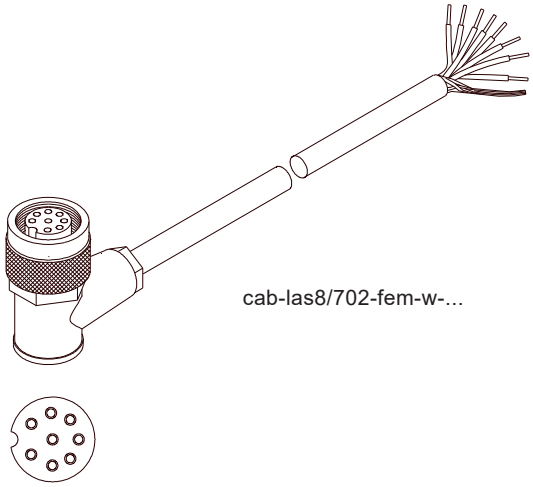

cab-las8/702-fem-w-...

Connection of SI-CON8-FIO to PC:

Connecting cable:
cab-las5/PC-...
cab-las5/PC-w-...
cab-5/USB-...
cab-5/USB-w-...
cab-5/ETH-500

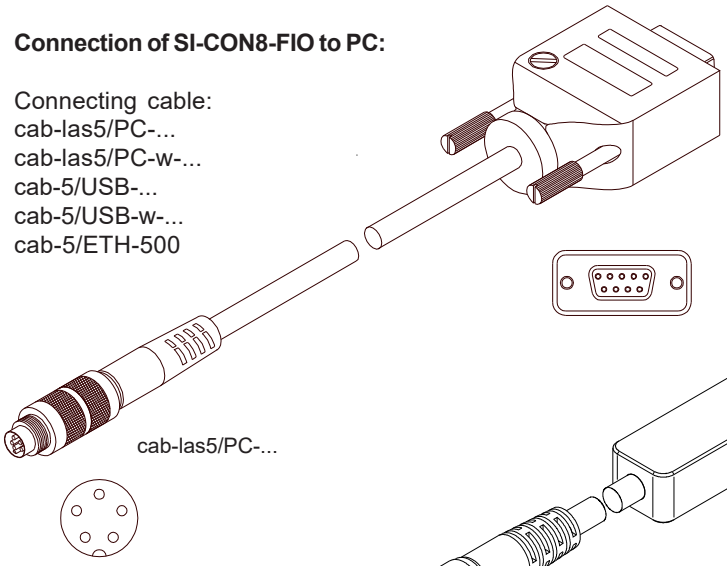

cab-las5/PC-...

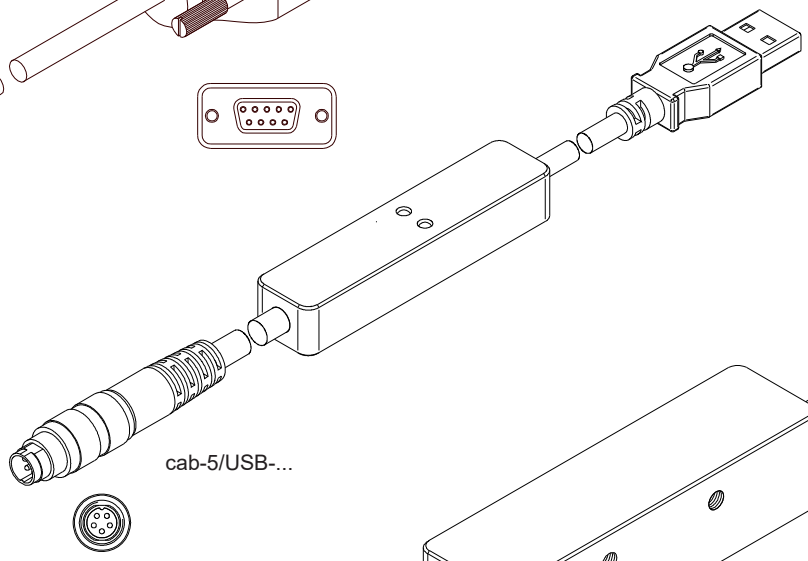

cab-5/USB-...

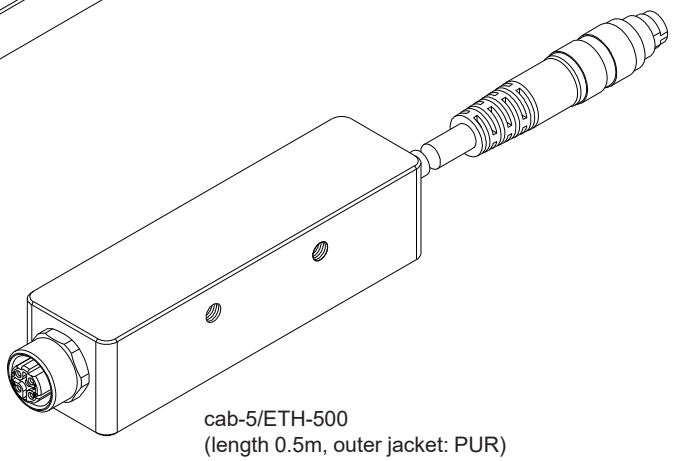

cab-5/ETH-500
(length 0.5m, outer jacket: PUR)
4-pole M12 fem. conn. (D-coded)
for connection of an external
CAT5 cable, e.g.
cab-eth/M12D-RJ45-flx-(length)

Windows® Software

Windows® software SI-CON8-Scope

The SI-CON8 control unit can be easily parameterized with the help of the Windows® user interface. For this purpose the SI-CON8 control unit is connected to the PC by way of the cab-las5/PC or cab-5/USB interface cable. When parameterization is finished, the PC can be disconnected again.

Windows® user interface:

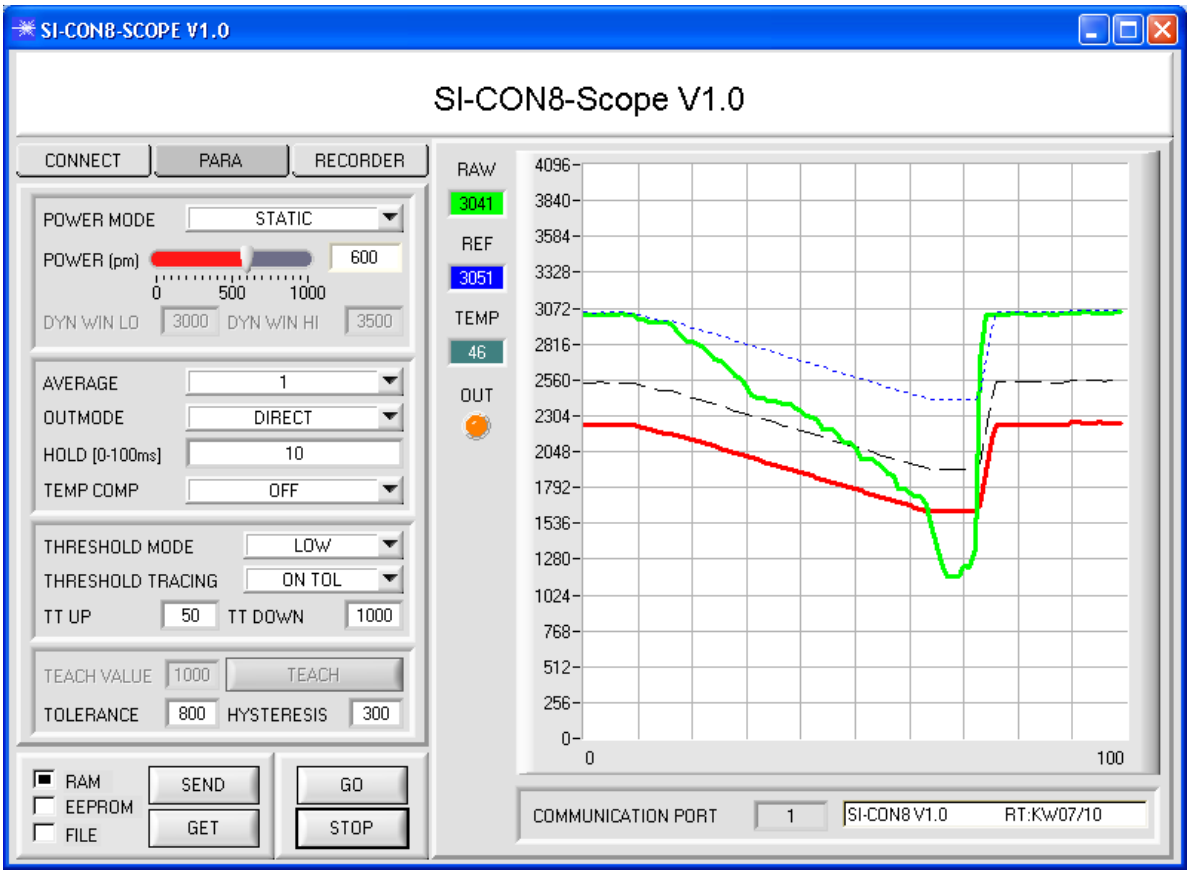

The analog laser light barriers of A-LAS Series can be connected to the electronic control unit SI-CON8. The electronic control unit guarantees a stable voltage supply for the respective transmitte and receiver.
The electronic control unit also amplifies and processes the analog signal of the receiver in a suitable manner. A micro-controller performs 12-bit analog/digital conversion of the analog signal, allowing recording and evaluation of the signal characteristics at the sensor. Furthermore the electronic control unit offers various options for intelligent transmitting power control (dirt accumulation compensation) at the sensor.

Parameters and measured values can be exchanged between the PC and the electronic control unit through either the RS232 interface or Ethernet interface (by means of an Ethernet adapter). All the parameters can be stored in the non-volatile EEPROM of the electronic control unit through the interface.
The SI-CON8-Scope V1.0 Windows software facilitates parameterisation, diagnostics, and adjustment of the sensor system.
The SI-CON8-Scope V1.0 software furthermore features the function of a data recorder that automatically records data and saves them on the PC's hard disk.

The sensor system comprising sensor and electronic control unit is temperature-compensated in a range from 0°C to 80°C.

Firmware updates can be easily performed through the RS232 interface even when the sensor system is installed.

When parameterisation is finished, the electronic control unit continues to run in STAND-ALONE operation, without a PC.

Fiber Optics

Field of use:

Optical fibers offer solutions for difficult tasks in optoelectronis. They can be used universally and allow flexible applications.



Advantages:

- Highest quality
- Selection from different fiber types
- Thermal stability
- Great variety of available standard sensor heads
- Special designs
- Various attachment optics available

Characteristics:

Light-conducting glass fibers are optical components that allow the transmission of light through any curved path based on the principle of total reflection.

The individual fiber is composed of high-break core glass and low-break cladding glass. The light beams entering the core glass within the critical angle are guided through the fiber by way of reflection at the core/cladding contact surfaces (step index fiber).

The highly flexible optical fibers are made of bundled individual glass fibers. The ends are each glued into a sensor head and a connector. The faces are optically polished. For protection against mechanical, chemical, or thermal destruction the optical fibers are provided with a corresponding protective sheath.

Order Code:

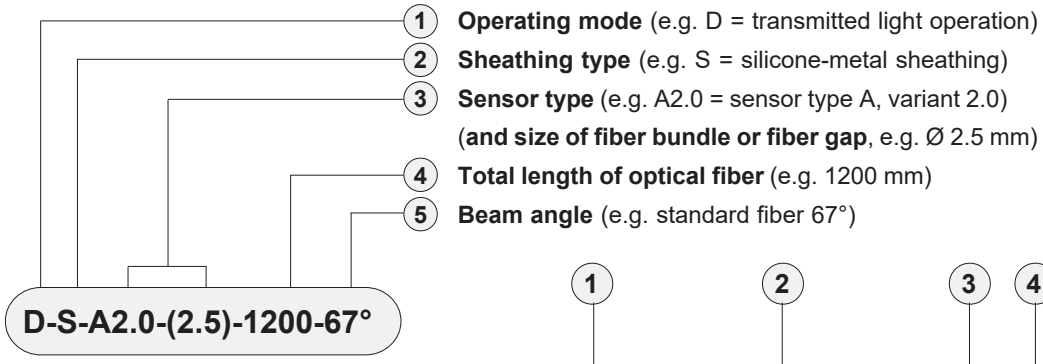

Order code for optical fiber

1 **Operating mode** (e.g. D = transmitted light operation)
2 **Sheathing type** (e.g. S = silicone-metal sheathing)
3 **Sensor type** (e.g. A2.0 = sensor type A, variant 2.0)
(**and size of fiber bundle or fiber gap**, e.g. Ø 2.5 mm)
4 **Total length of optical fiber** (e.g. 1200 mm)
5 **Beam angle** (e.g. standard fiber 67°)

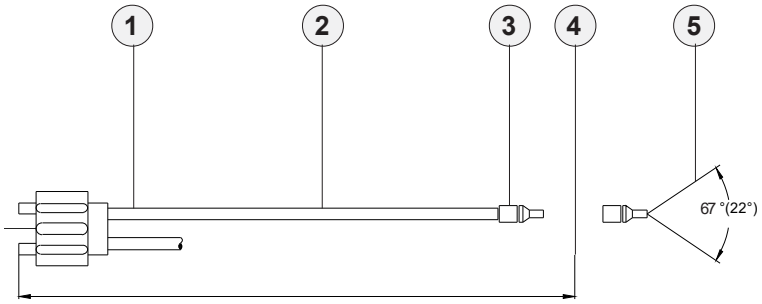

(For detailed description of the various types of fiber optics, please cf. catalog „FIO Series“)

Dimensions of adapter	cf. catalog FIO Series
Attachment optics (e.g. focus lens, reflex optics, prismn optics)	cf. catalog FIO Series
Fiber optics for reflex light operation	cf. catalog FIO Series
Fiber optics for transmitted light operation	cf. catalog FIO Series
Mounting hints	cf. catalog FIO Series

Optical Frontends

Overview: Optical frontends for fiber optics


KL-1-A2.0


KL-2-A2.0


KL-3-A2.0
KL-4-A1.1
KL-5-R1.1
KL-8-R2.1
KL-9-A3.0


KL-3/90°-A2.0
KL-8/90°-A2.0


KL-M12/90°-XL-A2.0


KL-90-A2.0


KL-52-XL-A3.0


KL-M8-A1.1


KL-M12-A1.1
KL-M12-A2.0
KL-M12-A3.0
KL-M12-R1.1


KL-M12-XL-A1.1
KL-M12-XL-A2.0
KL-M12-XL-R1.1


KL-M18-A1.1
KL-M18-A2.0
KL-M18-A3.0
KL-M18-M5.0
KL-M18-M6.0
KL-M18-M8.0
KL-M18-R1.1
KL-M18-R2.1


KL-M18-XL-A1.1
KL-M18-XL-A2.0
KL-M18-XL-A3.0
KL-M18-XL-M5.0
KL-M18-XL-M6.0
KL-M18-XL-M8.0
KL-M18-XL-R1.1
KL-M18-XL-R2.1


KL-M34-A1.1
KL-M34-A2.0
KL-M34-A3.0
KL-M34-M5.0
KL-M34-M6.0
KL-M34-M8.0
KL-M34-R1.1
KL-M34-R2.1


KL-M34-XL-A1.1
KL-M34-XL-A2.0
KL-M34-XL-A3.0
KL-M34-XL-M5.0
KL-M34-XL-M6.0
KL-M34-XL-M8.0
KL-M34-XL-R1.1
KL-M34-XL-R2.1


KL-M34/62-A1.1
KL-M34/62-A2.0
KL-M34/62-A3.0
KL-M34/62-R1.1
KL-M34/62-R2.1


KL-D-0°/2.5°-300-A2.0


KL-D-0°/40°-9-A2.0
KL-D-0°/42°-9-A2.0


KL-D-0°/45°-30-A2.0
KL-D-0°/45°-30-A3.0


KL-D-5°-85-POL-A2.0
KL-D-5°-85-POL-A3.0


KL-D-6°-200-A2.0


KL-D-10°-45-POL°-A3.0


KL-D-14°-84-A2.0


KL-D-17°-49-A2.0


KL-D-20°-31-A2.0


KL-D-20°-20-POL-A3.0


KL-D-28°-26-A2.0


KL-D-40°-13-A2.0

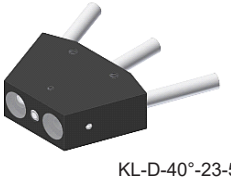
KL-D-40°-23-5/DIF-A2.0
KL-D-40°-23-5/DIF-A3.0


KL-D-45°-14-A2.0


KL-D-M12-0°/30°-9-A2.0
KL-D-M12-0°/30°-9-A3.0


KL-D-M12-XL-0°/30°-30-A2.0


KL-M34/90°-XL


KL-M18-XL-0°/(17°-60°)-30-M5.0

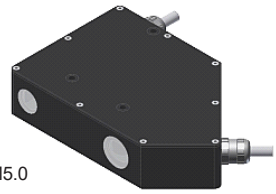
KL-D-0°/45°-85-1200-A3.0

Optical Frontends

Optical frontends for reflected light or transmitted light fiber optics:

Part number:	Suitable for fiber optics type: (R, T = reflected light, D= transmitted light)	Characteristics:
KL-1-A2.0 (2 pcs. necessary)	D-S-A2.0-(2.5)-...-67° or 22°	Transmitter/receiver distance typ. 50 mm ... 200 mm
KL-2-A2.0	R-S-A2.0-(2.5)-...-67° or 22°	Transmitter/receiver distance max. 300 mm, beam divergency ± 7,5°
KL-2-A2.0 (2 pcs. necessary)	D-S-A2.0-(2.5)-...-67° or 22°	Transmitter/receiver distance max. 300 mm, beam divergency ± 7,5°
KL-3-A2.0	R-S-A2.0-(2.5)-...-67° or 22°	Working distance typ. 10 mm ... 20 mm
KL-D-3/30-R/D-A2.0	R/D-S-A2.0-(2.5)-1200-67° *Special version**	Working distance typ. 30 mm
KL-4-A1.1	R-S-A1.1-(0.6)-...-67° or 22°	Working distance typ. 10 mm ... 15 mm
KL-4-A1.1	R-S-A1.1-(1.1)-...-67° or 22°	Working distance typ. 10 mm ... 15 mm
KL-4-A1.1	R-S-A1.1-(1.5)-...-67° or 22°	Working distance typ. 10 mm ... 15 mm
KL-5-R1.1	R-S-R1.1-(3x0.5)-...-67° or 22°	Working distance typ. 8 mm ... 20 mm
KL-8-R2.1	R-S-R2.1-(6x1)-...-67° or 22°	Working distance typ. 8 mm ... 25 mm
KL-8-N-R2.1	R-S-R2.1-(6x1)-...-67° or 22°	Working distance typ. 8 mm ... 25 mm *with guide slot (adjustment aid)*
KL-9-A3.0	R-S-A3.0-(3.0)-...-67° or 22°	Working distance typ. 8 mm ... 25 mm
KL-90-A2.0 (2 pcs. necessary)	D-S-A2.0-(2.5)-...-67° or 22°	Working distance typ. 20 mm ... 100 mm - *prismatic optics*
KL-52-XL-A3.0	R-S-A3.0-(3.0)-...-67°	Optics diameter 52 mm
KL-M8-A1.1	R-S-A1.1-(1.5)-...-67°	Working distance typ. 8 mm ... 20 mm
KL-M12-A1.1	R-S-A1.1-(1.5)-...-67°	Working distance typ. 8 mm ... 40 mm
KL-M12-A2.0	R-S-A2.0-(2.5)-...-67°	Working distance typ. 8 mm ... 40 mm
KL-M12-A3.0	R-S-A3.0-(3.0)-...-67°	Working distance typ. 8 mm ... 40 mm
KL-M12-R1.1	R-S-R1.1-(3x0.5)-...-67°	Working distance typ. 8 mm ... 40 mm
KL-M12-XL-A1.1	R-S-A1.1-(1.5)-...-67°	Working distance typ. 10 mm ... 100 mm
KL-M12-XL-A2.0	R-S-A2.0-(2.5)-...-67°	Working distance typ. 10 mm ... 100 mm
KL-M12/90°-XL-A2.0	R-S-A2.0-(2.5)-...-67°	Working distance typ. 10 mm ... 100 mm
KL-M12-XL-R1.1	R-S-R1.1-(3x0.5)-...-67°	Working distance typ. 10 mm ... 100 mm
KL-M18-A1.1	R-S-A1.1-(1.5)-...-67°	Working distance typ. 20 mm ... 60 mm
KL-M18-A2.0	R-S-A2.0-(2.5)-...-67°	Working distance typ. 20 mm ... 60 mm
KL-M18-A3.0	R-S-A3.0-(3.0)-...-67°	Working distance typ. 20 mm ... 60 mm
KL-M18-M5.0	T-S-M5.0-(5.0)-...-67° *Special version**	Working distance typ. 20 mm ... 60 mm
KL-M18-M6.0	T-S-M6.0-(6.0)-...-67° *Special version**	Working distance typ. 20 mm ... 60 mm
KL-M18-M8.0	T-S-M8.0-(8.0)-...-67° *Special version**	Working distance typ. 20 mm ... 60 mm
KL-M18-R1.1	R-S-R1.1-(3x0.5)-...-67°	Working distance typ. 20 mm ... 60 mm
KL-M18-R2.1	R-S-R2.1-(6x1)-...-67°	Working distance typ. 20 mm ... 60 mm
KL-M18-XL-A1.1	R-S-A1.1-(1.5)-...-67°	Working distance typ. 10 mm ... 200 mm
KL-M18-XL-A2.0	R-S-A2.0-(2.5)-...-67°	Working distance typ. 10 mm ... 200 mm
KL-M18-XL-A3.0	R-S-A3.0-(3.0)-...-67°	Working distance typ. 10 mm ... 200 mm
KL-M18-XL-M5.0	T-S-M5.0-(5.0)-...-67° *Special version**	Working distance typ. 10 mm ... 200 mm
KL-M18-XL-M6.0	T-S-M6.0-(6.0)-...-67° *Special version**	Working distance typ. 10 mm ... 200 mm
KL-M18-XL-M8.0	T-S-M8.0-(8.0)-...-67° *Special version**	Working distance typ. 10 mm ... 200 mm
KL-M18-XL-R1.1	R-S-R1.1-(3x0.5)-...-67°	Working distance typ. 10 mm ... 200 mm
KL-M18-XL-R2.1	R-S-R2.1-(6x1)-...-67°	Working distance typ. 10 mm ... 200 mm
KL-M18-XL--0°/(17°-60°)-30-M5.0	2x T-S-M5.0-(5.0)-...-67° *Special version**	Angle between the two fiber optics is adjustable from 17° to 60°

**Special version*:
Version is different to the standard version (e.g. no standard fiber adapter) and therefore is suitable only for certain sensors or applications

Optical Frontends

Optical frontends for reflected light or transmitted light fiber optics:

Part number:	Suitable for fiber optics type: (R, T = reflected light, D= transmitted light)	Characteristics:
KL-M34-A1.1	R-S-A1.1-(1.5)-...-67°	Working distance typ. 100 mm ... 250 mm
KL-M34-A2.0	R-S-A2.0-(2.5)-...-67°	Working distance typ. 100 mm ... 250 mm
KL-M34-A3.0	R-S-A3.0-(3.0)-...-67°	Working distance typ. 100 mm ... 250 mm
KL-M34-M5.0	T-S-M5.0-(5.0)-...-67° *Special version**	Working distance typ. 100 mm ... 250 mm
KL-M34-M6.0	T-S-M6.0-(6.0)-...-67° *Special version**	Working distance typ. 100 mm ... 250 mm
KL-M34-M8.0	T-S-M8.0-(8.0)-...-67° *Special version**	Working distance typ. 100 mm ... 250 mm
KL-M34-R1.1	R-S-R1.1-(3x0.5)-...-67°	Working distance typ. 100 mm ... 250 mm
KL-M34-R2.1	R-S-R2.1-(6x1)-...-67°	Working distance typ. 100 mm ... 250 mm
KL-M34-XL-A1.1	R-S-A1.1-(1.5)-...-67°	Working distance typ. 50 mm ... 400 mm
KL-M34-XL-A2.0	R-S-A2.0-(2.5)-...-67°	Working distance typ. 50 mm ... 400 mm
KL-M34-XL-A3.0	R-S-A3.0-(3.0)-...-67°	Working distance typ. 50 mm ... 400 mm
KL-M34-XL-M5.0	T-S-M5.0-(5.0)-...-67° *Special version**	Working distance typ. 50 mm ... 400 mm
KL-M34-XL-M6.0	T-S-M6.0-(6.0)-...-67° *Special version**	Working distance typ. 50 mm ... 400 mm
KL-M34-XL-M8.0	T-S-M8.0-(8.0)-...-67° *Special version**	Working distance typ. 50 mm ... 400 mm
KL-M34-XL-(M25x1.5)-M8.0	T-S-M8.0-(8.0)-...-67° *Special version**	as above but with cable screw fitting M25x1.5
KL-M34-XL-R1.1	R-S-R1.1-(3x0.5)-...-67°	Working distance typ. 50 mm ... 400 mm
KL-M34-XL-R2.1	R-S-R2.1-(6x1)-...-67°	Working distance typ. 50 mm ... 400 mm
KL-M34/62-A1.1	R-S-A1.1-(1.5)-...-67°	Working distance typ. 80 mm ... 200 mm
KL-M34/62-A2.0	R-S-A2.0-(2.5)-...-67°	Working distance typ. 80 mm ... 200 mm
KL-M34/62-A3.0	R-S-A3.0-(3.0)-...-67°	Working distance typ. 80 mm ... 200 mm
KL-M34/62-R1.1	R-S-R1.1-(3x0.5)-...-67°	Working distance typ. 80 mm ... 200 mm
KL-M34/62-R2.1	R-S-R2.1-(6x1)-...-67°	Working distance typ. 80 mm ... 200 mm
KL-D-0°/2.5°-300-A2.0	D-S-A2.0-(2.5)-...-67°	Working distance typ. 100 mm ... 500 mm
KL-D-0°/40°-9-A2.0	D-S-A2.0-(2.5)-...-67°	(to be supplemented)
KL-D-0°/42°-9-A2.0	D-S-A2.0-(2.5)-...-67°	(to be supplemented)
KL-D-0°/45°-30-A2.0	D-S-A2.0-(2.5)-...-67°	(to be supplemented)
KL-D-0°/45°-30-A3.0	D-S-A3.0-(3.0)-...-67°	(to be supplemented)
KL-D-5°-85-POL-A2.0	D-S-A2.0-(2.5)-...-67°	(to be supplemented)
KL-D-5°-85-POL-A3.0	D-S-A3.0-(3.0)-...-67°	(to be supplemented)
KL-D-6°-200-A2.0	D-S-A2.0-(2.5)-...-67°	Working distance typ. 100 mm ... 230 mm
KL-D-14°-84-A2.0	D-S-A2.0-(2.5)-...-67°	Working distance typ. 60 mm ... 120 mm
KL-D-14°-84-A2.0-T400	D-S-A2.0-(2.5)-1200-67°-T400	Working distance typ. 60 mm ... 120 mm *thermally stable up to 400°C*
KL-D-17°-49-A2.0	D-S-A2.0-(2.5)-...-67°	Working distance typ. 30 mm ... 80 mm
KL-D-20°-31-A2.0	D-S-A2.0-(2.5)-...-67°	Working distance typ. 10 mm ... 50 mm
KL-D-28°-26-A2.0	D-S-A2.0-(2.5)-...-67°	Working distance typ. 20 mm ... 50 mm
KL-D-28°-26-KG2-A2.0	D-S-A2.0-(2.5)-...-67°	Working distance typ. 20 mm ... 50 mm
KL-D-30°-23-A2.0	D-S-A2.0-(2.5)-...-67°	Working distance typ. 20 mm ... 30 mm
KL-D-30°-23-KG2-A2.0	D-S-A2.0-(2.5)-...-67°	Working distance typ. 20 mm ... 30 mm
KL-D-40°-13-A2.0	D-S-A2.0-(2.5)-...-67°	Working distance typ. 15 mm ... 25 mm
KL-D-40°-23-5/DIF-A2.0	D-S-A2.0-(2.5)-...-67°	(to be supplemented)
KL-D-40°-23-5/DIF-A3.0	D-S-A3.0-(3.0)-...-67°	(to be supplemented)
KL-D-45°-14-A2.0	D-S-A2.0-(2.5)-...-67°	(to be supplemented)
KL-D-M12-0°/30°-9-A2.0	D-S-A2.0-(2.5)-...-67°	(to be supplemented)
KL-D-M12-0°/30°-9-A3.0	D-S-A3.0-(3.0)-...-67°	(to be supplemented)
KL-D-M12-XL-0°/30°-30-A2.0	D-S-A2.0-30°/30-A2.0 *Special version**	Working distance typ. 10 mm ... 100 mm

**Special version*:
Version is different to the standard version (e.g. no standard fiber adapter) and therefore is suitable only for certain sensors or applications

Fiber Optics Fixtures

Mounting brackets (fixtures) for transmitted light fiber optics with sensor head type **„A2.0“, „A3.0“, or „R2.1“:**

Part number:	Suitable for fiber optics type: (D= transmitted light)	Characteristics:
C-MOUNT-A2.0-180°-22/50	D-S-A2.0-(2.5)-...-67°	Transmitter/receiver distance 22 mm, fork width/depth: 50/50 mm
C-MOUNT-A2.0-180°-60/50	D-S-A2.0-(2.5)-...-67°	Transmitter/receiver distance 60 mm, fork width/depth: 60/50 mm
C-MOUNT-A2.0-180°-100/50	D-S-A2.0-(2.5)-...-67°	Transmitter/receiver distance 100 mm, fork width/depth: 100/50 mm
C-MOUNT-A3.0-180°-16/50	D-S-A3.0-(3.0)-...-67°	Transmitter/receiver distance 16 mm, fork width/depth: 50/50 mm
C-MOUNT-A3.0-180°-60/50	D-S-A3.0-(3.0)-...-67°	Transmitter/receiver distance 60 mm, fork width/depth: 94/50 mm
C-MOUNT-A3.0-180°-100/50	D-S-A3.0-(3.0)-...-67°	Transmitter/receiver distance 100 mm, fork width/depth: 100/50 mm
MOUNT-A2.0-170°-5	D-S-A2.0-(2.5)-...-67°	Angle of incidence 85° to the vertical in a distance of 5 mm to the object, gloss control of extremely rough surfaces
MOUNT-A3.0-170°-5	D-S-A3.0-(3.0)-...-67°	Angle of incidence 85° to the vertical in a distance of 5 mm to the object, gloss control of extremely rough surfaces
MOUNT-A2.0-150°-10	D-S-A2.0-(2.5)-...-67°	Angle of incidence 75° to the vertical in a distance of 10 mm to the object, gloss control of rough surfaces
MOUNT-A3.0-150°-10	D-S-A3.0-(3.0)-...-67°	Angle of incidence 75° to the vertical in a distance of 10 mm to the object, gloss control of rough surfaces
MOUNT-A2.0-120°-12	D-S-A2.0-(2.5)-...-67°	Angle of incidence 60° to the vertical in a distance of 12 mm to the object, gloss control of matt to light glossy surfaces
MOUNT-A3.0-120°-12	D-S-A3.0-(3.0)-...-67°	Angle of incidence 60° to the vertical in a distance of 12 mm to the object, gloss control of matt to light glossy surfaces
MOUNT-R1.1-120°-12	D-S-R1.1-(3x0.5)-...-67°	Angle of incidence 60° to the vertical in a distance of 12 mm to the object, gloss control of matt to light glossy surfaces
MOUNT-R2.1-120°-12	D-S-R2.1-(6x1)-...-67°	Angle of incidence 60° to the vertical in a distance of 12 mm to the object, gloss control of matt to light glossy surfaces
MOUNT-A2.0-90°-15	D-S-A2.0-(2.5)-...-67°	Angle of incidence 45° to the vertical in a distance of 15 mm to the object, gloss control of matt to glossy surfaces
MOUNT-A3.0-90°-15	D-S-A3.0-(3.0)-...-67°	Angle of incidence 45° to the vertical in a distance of 15 mm to the object, gloss control of matt to glossy surfaces
MOUNT-A2.0-40°-20	D-S-A2.0-(2.5)-...-67°	Angle of incidence 20° to the vertical in a distance of 20 mm to the object, gloss control of very glossy surfaces
MOUNT-A3.0-40°-20	D-S-A3.0-(3.0)-...-67°	Angle of incidence 20° to the vertical in a distance of 20 mm to the object, gloss control of very glossy surfaces

C-MOUNT-A2.0-180°-.../50
+ D-S-A2.0-(2.5)-...-67°



C-MOUNT-A3.0-180°-.../50
+ D-S-A3.0-(3.0)-...-67°

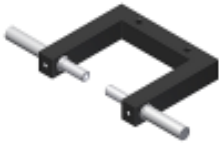

MOUNT-A2.0-170°-5
+ D-S-A2.0-(2.5)-...-67°

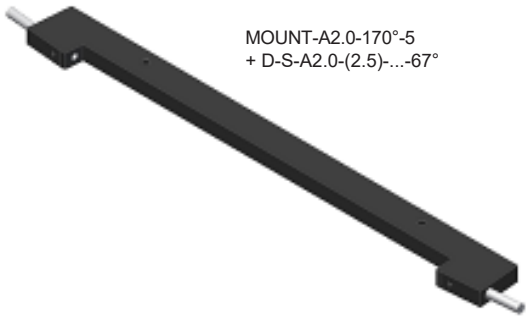

MOUNT-A2.0-150°-10
+ D-S-A2.0-(2.5)-...-67°

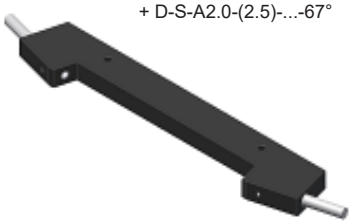

MOUNT-A2.0-120°-12
+ D-S-A2.0-(2.5)-...-67°



MOUNT-A2.0-90°-15
+ D-S-A2.0-(2.5)-...-67°



MOUNT-A2.0-40°-20
+ D-S-A2.0-(2.5)-...-67°



Fiber Optics Fixtures

Mounting brackets (fixtures) for transmitted light fiber optics with sensor head type **„Q....“ (cross-section converter):**

Part number:	Suitable for fiber optics type: (D= transmitted light)	Characteristics:
C-MOUNT-Q1-180°-50/50	D-S-Q1-(5x0.5)-...-67°	Width of measuring range: 5 mm, transmitter/receiver distance: 50 mm, distance beginning of measurement range (inner side) to inner edge of housing: 50 mm
C-MOUNT-Q2-180°-50/50	D-S-Q2-(10x0.3)-...-67°	Width of measuring range: 10 mm, transmitter/receiver distance: 50 mm, distance beginning of measurement range (inner side) to inner edge of housing: 50 mm
C-MOUNT-Q3-180°-50/50	D-S-Q3-(18x0.3)-...-67°	Width of measuring range: 18 mm, transmitter/receiver distance: 50 mm, distance beginning of measurement range (inner side) to inner edge of housing: 50 mm
C-MOUNT-Q4-180°-50/50	D-S-Q4-(28x0.2)-...-67°	Width of measuring range: 28 mm, transmitter/receiver distance: 50 mm, distance beginning of measurement range (inner side) to inner edge of housing: 50 mm
C-MOUNT-Q5-180°-50/50	D-S-Q5-(38x0.15)-...-67°	Width of measuring range: 38 mm, transmitter/receiver distance: 50 mm, distance beginning of measurement range (inner side) to inner edge of housing: 50 mm
C-MOUNT-Q6-180°-50/50	D-S-Q6-(48x0.15)-...-67°	Width of measuring range: 48 mm, transmitter/receiver distance: 50 mm, distance beginning of measurement range (inner side) to inner edge of housing: 50 mm



KL-50/50-5
+ D-S-Q1-(5x0.5)-...-67°

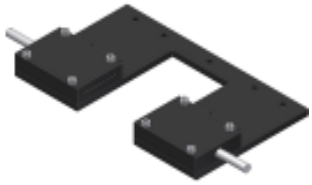

KL-50/50-28
+ D-S-Q4-(28x0.2)-...-67°

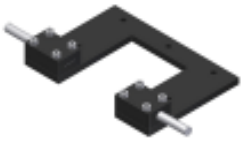

KL-50/50-10
+ D-S-Q2-(10x0.3)-...-67°

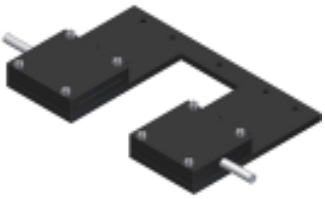

KL-50/50-38
+ D-S-Q5-(38x0.15)-...-67°

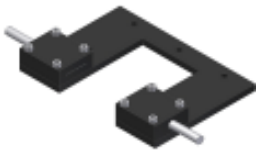

KL-50/50-18
+ D-S-Q3-(18x0.3)-...-67°

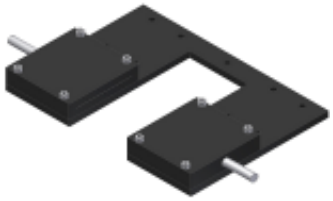

KL-50/50-48
+ D-S-Q6-(48x0.15)-...-67°