A-LAS Series

SI-CON8 Electronic control unit

- Electronic control unit for control of A-LAS sensor frontends
- 100% check of objects (tolerance band monitoring)
- Positioning and thickness check of objects (in µm range)
- High trigger accuracy (in µm range)
- High switching frequency (typ. 30 kHz)
- RS232 interface (USB- and Ethernet converter available)
- Parameterizable under Windows®
- Threshold correction can be activated via software
- Adjustment of trigger threshold and tolerance band via software
- Output polarity can be switched via software
- Dirt accumulation compensation
- Sturdy metal housing



Design

Product name:

SI-CON8
(incl. Windows® PC software SI-CON8-Scope)

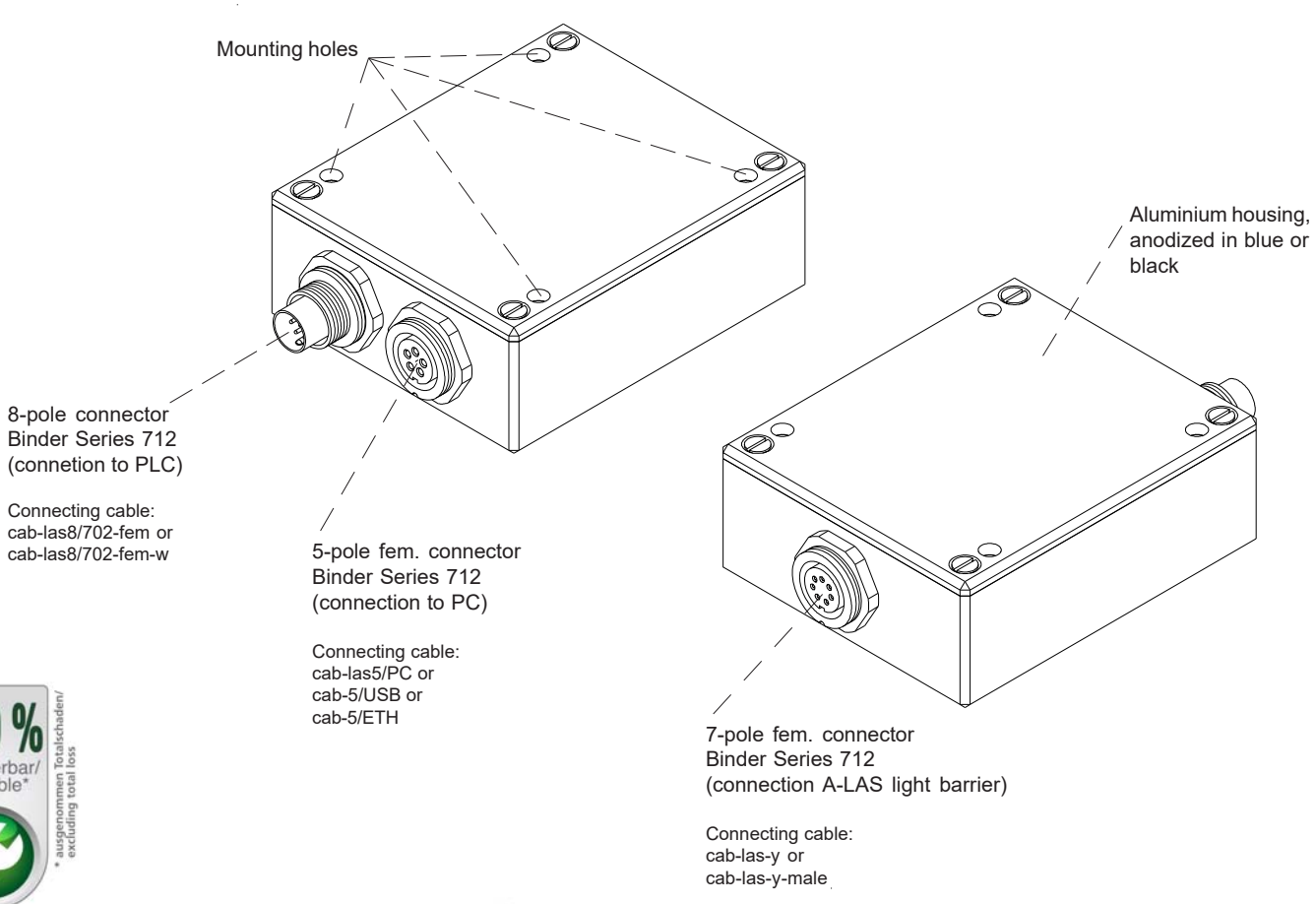

100 % reparierbar/ reparable* * ausgenommen Totalschaden/ excluding total loss

Technical Data

Model	SI-CON8
Voltage supply	+24VDC (± 10%), reversed-polarity protected, overload protected
Current consumption	max. 150 mA
Min. detectable object	< 10 µm (depends on aperture size of A-LAS sensor)
Resolution	0,4% (100% = aperture size of A-LAS sensor)
Operating temperature range	-20°C ... +55°C
Storage temperature range	-20°C ... +85°C
Enclosure rating	IP64
Threshold correction	can be activated via PC
ANALOG output	0V ... 10V
DIGITAL output	adjustable via PC: Qinv: NPN bright-switching (NPN normally closed) / PNP dark-switching PNP normally open) Q: NPN dark-switching (NPN normally open) / PNP bright-switching (PNP normally closed)
Current control input (I-CONTROL)	Laser power adjustable via PC
Type of connector	Connection to PLC: 8-pole connector Binder Series 712 Connection to PC: 5-pole fem. connector Binder Series 712 Connection to sensor: 7-pole fem. connector Binder Series 712
Connecting cables	Connection to PLC: cab-las8/702-fem Connection to PC: cab-las5/PC or cab-5/USB or cab-5/ETH
Dynamic switching output (pulse lengthening)	can be activated via PC (0ms ... 100ms)
Switching frequency	typ. 30 kHz
Max. switching current	100 mA, short-circuit proof
Band width (analog signal)	1 kHz (-3 dB)
Scan frequency	max. 200 kHz
Interface	RS232, parameterisable under Windows®
Housing material	Aluminium, anodized in blue or black
Housing dimensions	LxWxH approx. 60 mm x 50 mm x 22 mm (without connector flanges)
EMC test acc. to	DIN EN 60947-5-2 CE

Dimensions

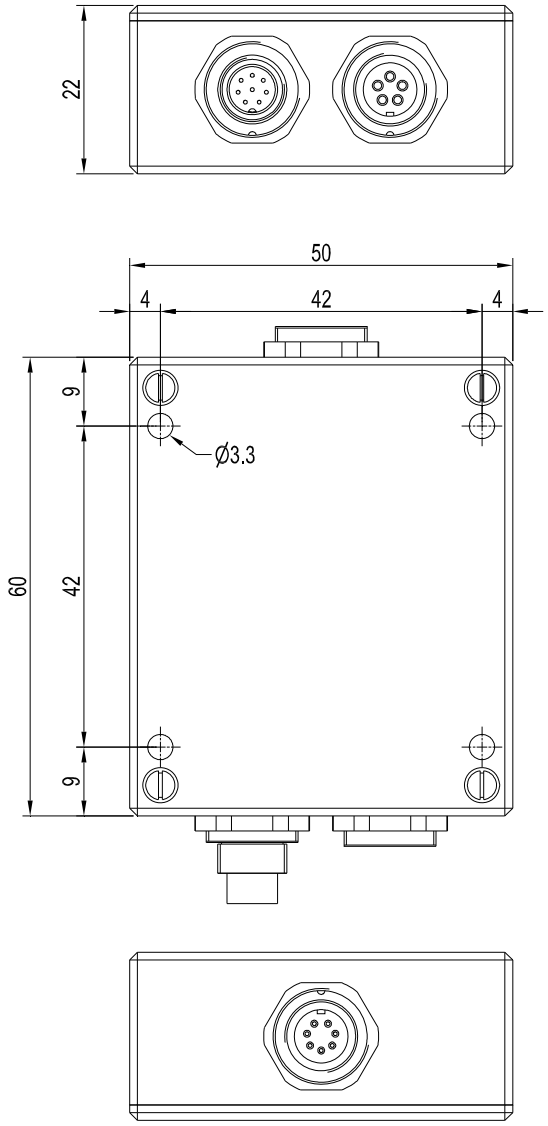

All dimensions in mm

Connector Assignment

Connection SI-CON8 to PLC:
8-pole connector Binder Series 712

Pin:	Wire color:	Assignment:
1	white	GND (0V)
2	brown	+Ub (+24VDC ± 10%)
3	green	IN0
4	yellow	OUT0 (Digital 0: Type 0 ... 1V, Digital 1: Type +Ub - 10%)
5	grey	not connected
6	pink or black	ANALOG (0V ... +10V)
7	blue	not connected
8	red	not connected

Connecting cable:
cab-las8/702-fem-(*length*) or
cab-las8/702-fem-w-(*length*) (angle type 90°)
(standard length 2m, available up to length 25m)

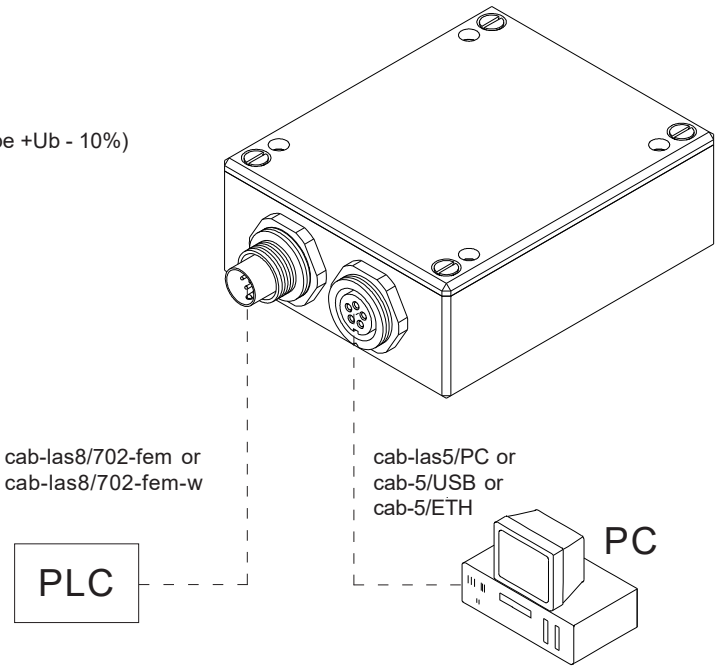

Connection SI-CON8-FIO to PC:
5-pole fem. connector Binder Series 712

Pin:	Assignment:
1	0V (GND)
2	TxD
3	RxD
4	+24VDC (+Ub, OUT)
5	not connected

Connecting cable:
cab-las5/PC-(*length*) or
cab-las5/PC-w-(*length*) (angle type 90°)
(standard length 2m, also available: length 5m)

alternative:
Connection via USB-interface at PC:
Connecting cable (incl. driver software):
cab-5/USB-(*length*) or
cab-5/USB-w-(*length*) (angle type 90°)
(standard length 2m, also available: length 0.5m, 1m)

alternative:
Connection to local network via Ethernet bus:
Adapter (incl. software „SensorFinder“):
cab-4/ETH-500
(standard length 0.5m)
Optional: External CAT5 cable, e.g.
cab-eth/M12D-RJ45-flx-(length)

Connection SI-CON8 to A-LAS sensor:
7-pole fem. connector Binder Series 712

Pin:	Assignment:
1	GND (0V)
2	+5V
3	I-CONTROL
4	+5V
5	ANALOG (0V ... +5V)
6	not connected
7	GND (0V)

Connecting cable*:
cab-las-y-(*length*) or
cab-las-y-male-(*length*)
(standard length: 1m, also available lengths: 2m, 3m, 5m)

(* cable type depends on
type of A-LAS sensor used)

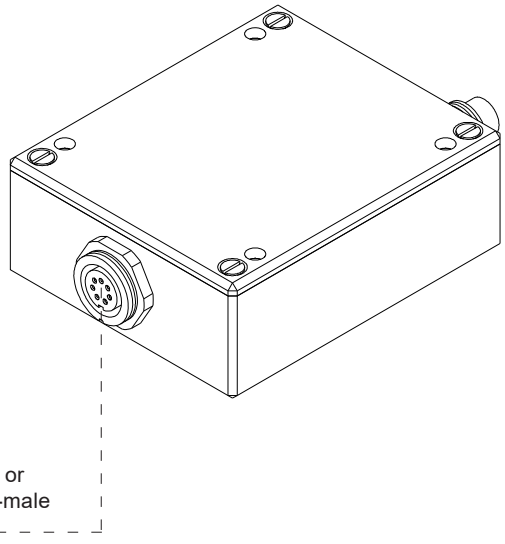

Connecting Cables

Connection of SI-CON8 to PLC:

Connecting cable:
cab-las8/702-fem-...
cab-las8/702-fem-w-...

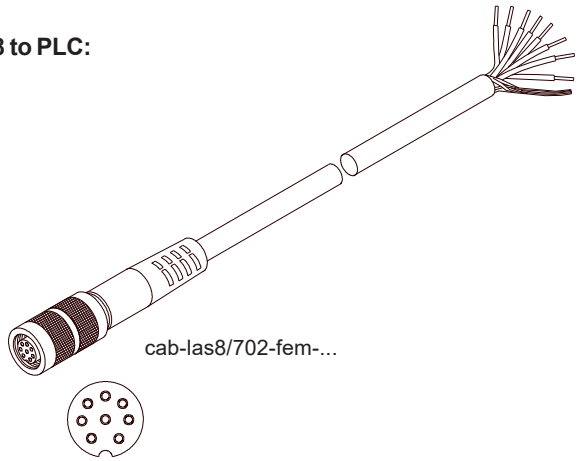
cab-las8/702-fem-...

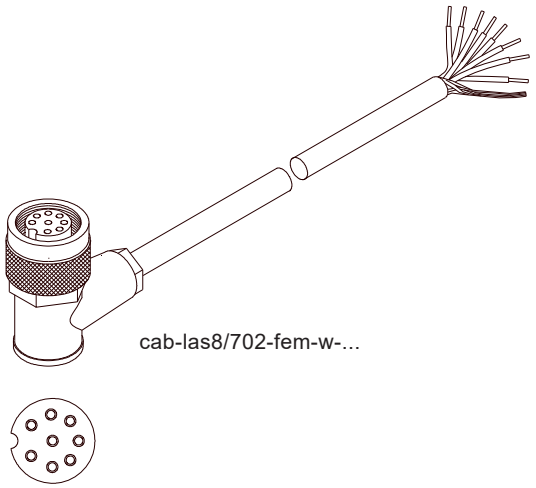
cab-las8/702-fem-w-...

Connection of SI-CON8-FIO to PC:

Connecting cable:
cab-las5/PC-...
cab-las5/PC-w-...
cab-5/USB-...
cab-5/USB-w-...
cab-5/ETH-500

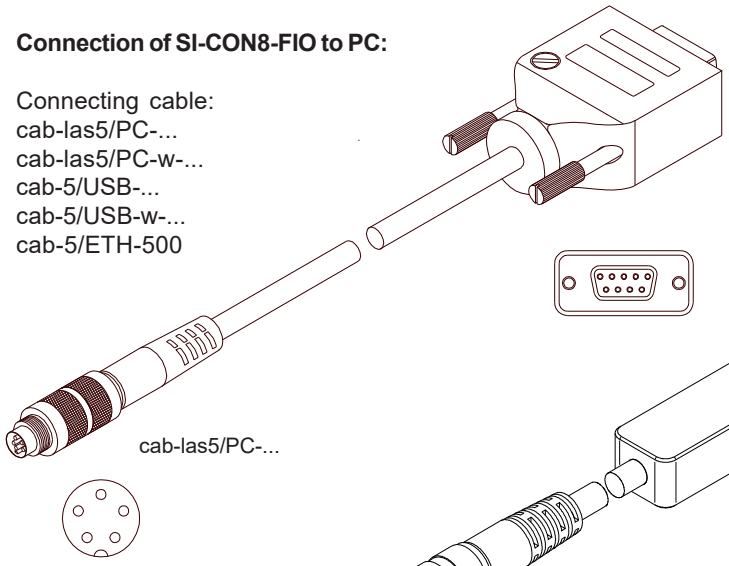
cab-las5/PC-...

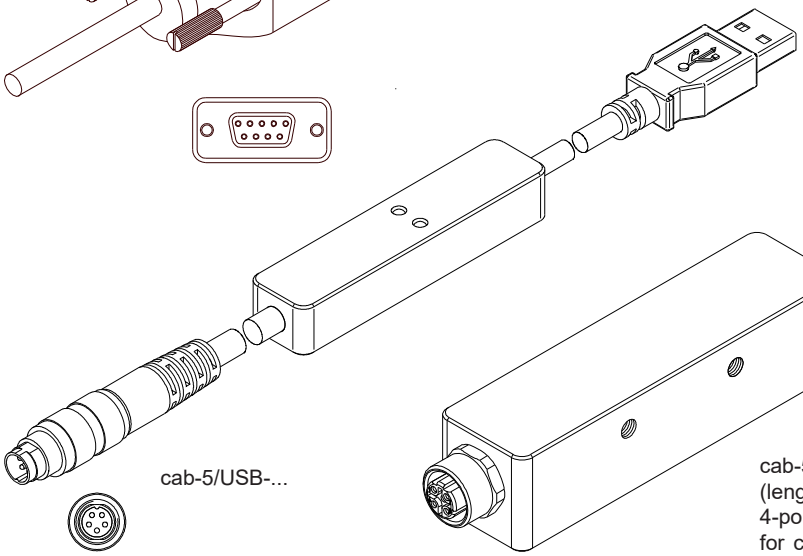
cab-5/USB-...

cab-5/ETH-500
(length 0.5m, outer jacket: PUR)
4-pole M12 fem. conn. (D-coded)
for connection of an external
CAT5 cable, e.g.
cab-eth/M12D-RJ45-flx-(length)

Connection of SI-CON8 to A-LAS sensor:

Connecting cable for A-LAS sensors
with **3-pole/4-pole male connector**
Binder series 712:
cab-las-y-...

Connecting cable for A-LAS sensors
with **3-pole/4-pole female connector**
Binder series 712:
cab-las-y-male-...

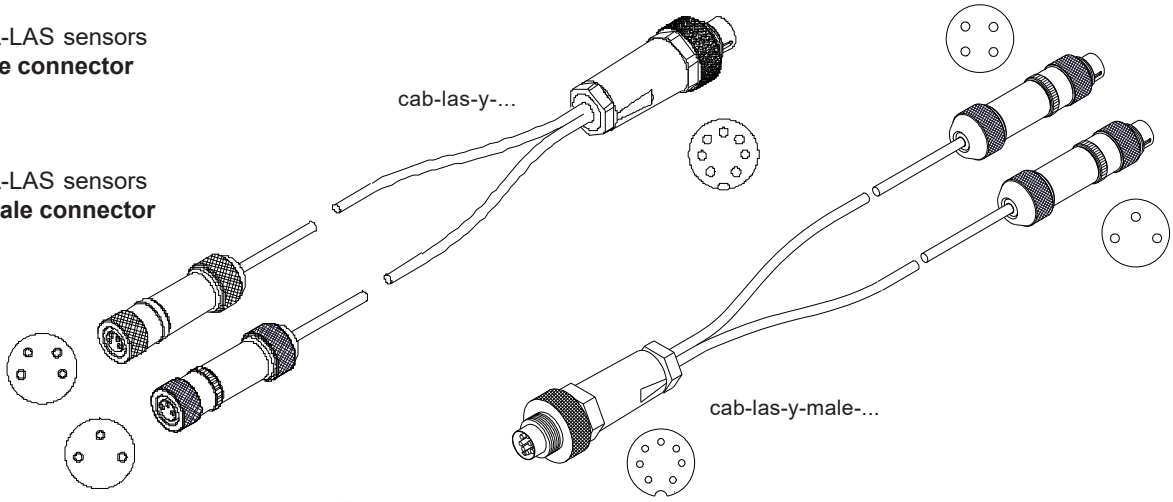
cab-las-y-...

cab-las-y-male-...

Windows® Software

Windows® software SI-CON8-Scope

The SI-CON8 control unit can be easily parameterized with the help of the Windows® user interface. For this purpose the SI-CON8 control unit is connected to the PC by way of the cab-las5/PC or cab-5/USB interface cable. When parameterization is finished, the PC can be disconnected again.

Windows® user interface:

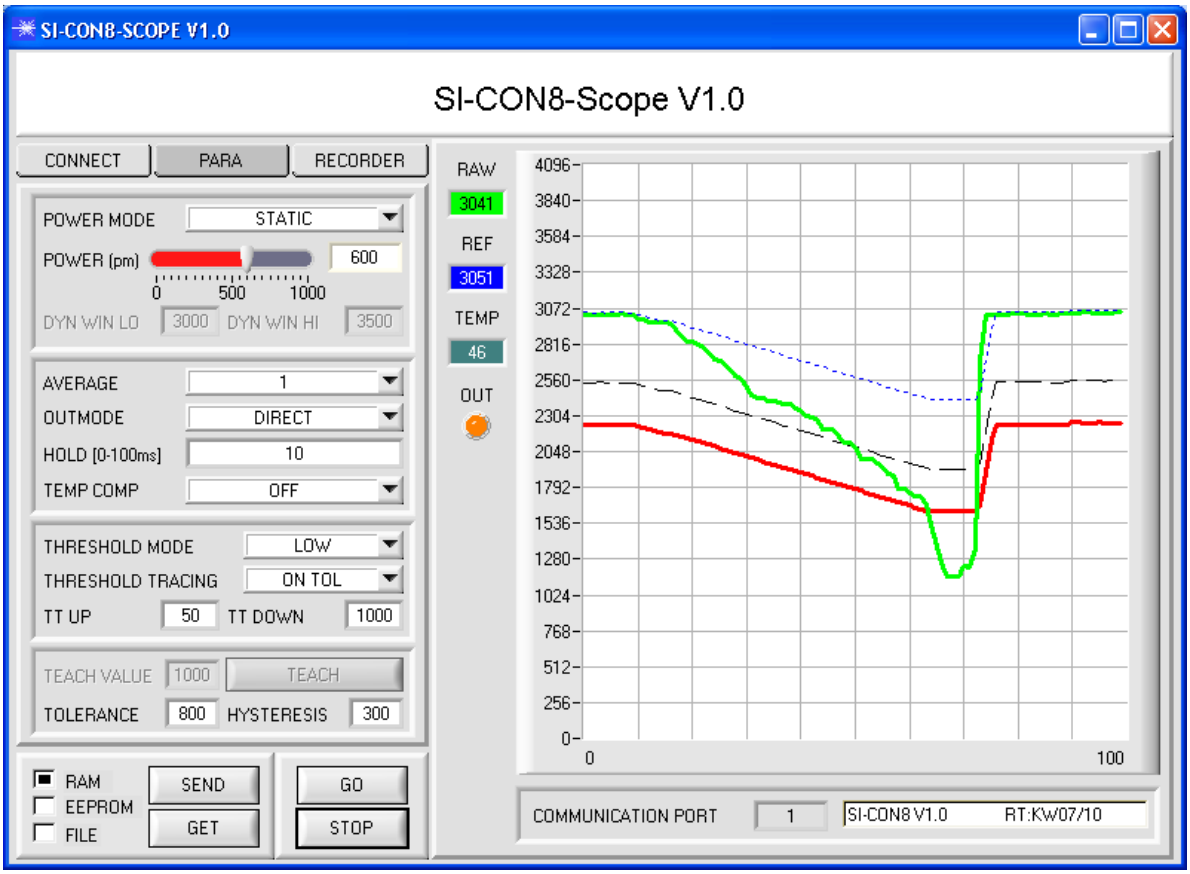

The analog laser light barriers of A-LAS Series can be connected to the electronic control unit SI-CON8. The electronic control unit guarantees a stable voltage supply for the respective transmitte and receiver.
The electronic control unit also amplifies and processes the analog signal of the receiver in a suitable manner. A micro-controller performs 12-bit analog/digital conversion of the analog signal, allowing recording and evaluation of the signal characteristics at the sensor. Furthermore the electronic control unit offers various options for intelligent transmitting power control (dirt accumulation compensation) at the sensor.

Parameters and measured values can be exchanged between the PC and the electronic control unit through either the RS232 interface or Ethernet interface (by means of an Ethernet adapter). All the parameters can be stored in the non-volatile EEPROM of the electronic control unit through the interface.
The SI-CON8-Scope V1.0 Windows software facilitates parameterisation, diagnostics, and adjustment of the sensor system.
The SI-CON8-Scope V1.0 software furthermore features the function of a data recorder that automatically records data and saves them on the PC's hard disk.

The sensor system comprising sensor and electronic control unit is temperature-compensated in a range from 0°C to 80°C.

Firmware updates can be easily performed through the RS232 interface even when the sensor system is installed.

When parameterisation is finished, the electronic control unit continues to run in STAND-ALONE operation, without a PC.