L-LAS Series

L-LAS-TB-75-T-AL
L-LAS-TB-75-R-AL, -R-4/20-AL

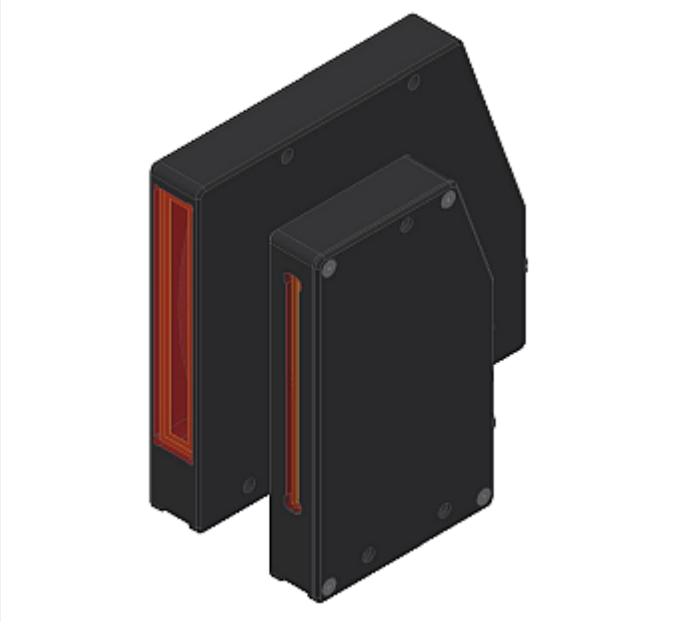

- Line laser <0.39 mW, wave length 670 nm, laser class 1
- Visible laser line, light curtain 75 mm
- Measuring range typ. 73 mm
- Resolution up to 8 µm (depends on selected scan frequency)
- Working distance up to 2000 mm
- Integrated interference filter
- CCD line detector with ~1200 Pixel, ~9600 Sub-Pixel
- RS232 user interface (USB or Ethernet converter optional)
- 2 digital inputs, 3 digital outputs (HIGH/LOW/GO)
- Analog output either 0 ... +10V or 4 ... 20mA (variant selectable)
- Max. scan frequency selectable via software (1.1 kHz or 2.1 kHz)
- Multi-edge evaluation of the video signal
- Switching state indication via 4 two-color LEDs (2x red/grn, 2x yel/grn)

Design

Product name:

L-LAS-TB-75-T-AL (Transmitter)
L-LAS-TB-75-R-AL (Receiver 0...+10V) or
L-LAS-TB-75-R-4/20-AL (Receiver 4...20mA)
(Receiver incl. Windows® PC software
L-LAS-TB-Scope V5.5 or later)

Accessories: (cf. pages 8-9)

TRA-L-LAS-TB-CL-... (mounting plate)
ABL-TB-75-CL (blast air top-part)

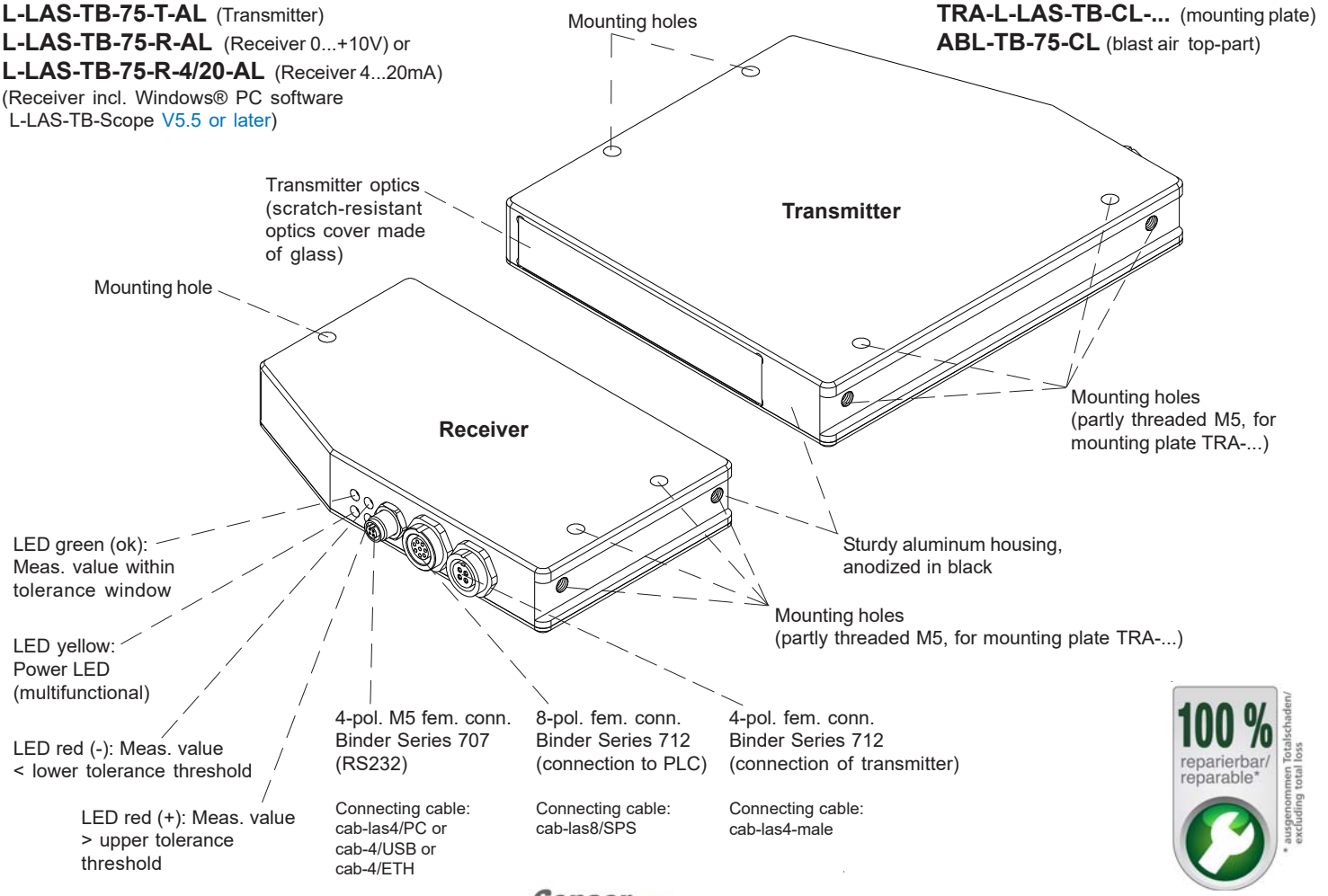

100 % reparierbar/ reparable* * ausgenommen Totalschaden/ excluding total loss

Technical Data

Type	L-LAS-TB-75-T-AL L-LAS-TB-75-R-AL	L-LAS-TB-75-T-AL L-LAS-TB-75-R-4/20-AL
Laser	Semiconductor laser, 670 nm, DC operation, < 0.39 mW max. opt. power, laser class 1 acc. to DIN EN 60825-1. The use of these laser sensors therefore requires no additional protective measures.	
Working distance	distance transmitter/receiver: up to 2000 mm	
Measuring range	typ. 73 mm	
Resolution	typ. 8 µm (Normal Speed mode), typ. 16 µm (Fast Speed mode)	
Reproducibility	typ. ± 8 µm (Normal Speed mode), typ. ± 16 µm (Fast Speed mode)	
Linearity	typ. 0.15% FSR (full scale range)	
Optical filter	Interference filter	
Analog output (1x)	voltage output 0 ... +10V	current output 4 ... 20mA
Digital outputs (3x) (OUT0, OUT1, OUT2)	OUT0: (-) Measuring value < lower tolerance threshold OUT1: (+) Measuring value > upper tolerance threshold OUT2: (ok) Measuring value within tolerance window pnp bright-switching/npn dark-switching or pnp dark-switching/npn bright-switching, adjustable under Windows®, 100 mA, short-circuit proof	
Digital inputs (2x) (IN0, IN1)	IN0: Extern trigger, IN1: Teach/Reset (double function) input voltage +Ub/0V, with protective circuit	
Voltage supply	+24VDC (± 10%)	
Sensitivity setting	under Windows® via PC	
Laser power correction	adjustable under Windows® via PC	
Current consumption	typ. 200 mA	
Enclosure rating	electronics: IP54, optics: IP67	
Operating temperature range	-10°C ... +50°C	
Storage temperature range	-20°C ... +85°C	
Housing material	aluminum, anodized in black	
Housing dimensions	transmitter: LxWxH approx. 130 mm x 118 mm x 20 mm (without flange connectors) receiver: LxWxH approx. 70 mm x 118 mm x 20 mm (without flange connectors)	
Connectors receiver	8-pole circular female connector type Binder 712 (PLC/Power) 4-pole M5 circular female connector type Binder 707 (RS232/PC) 4-pole circular female connector type Binder 712 (connection to transmitter)	
Connector transmitter	4-pole circular female connector type Binder 712 (connection to receiver)	
LED display	LED red (+): measuring value > upper tolerance threshold LED green (ok): measuring value within tolerance window LED red (-): measuring value < lower tolerance threshold LED yellow: multifunctional	
EMC test acc. to	DIN EN 60947-5-2 CE	
Scan frequency	Normal Speed mode (high resolution = 8 µm): max. 1.1 kHz Fast Speed mode (half resolution = 16 µm): max. 2.1 kHz can be switched unter Windows®	
Max. switching current	100 mA, short-circuit proof	
Interface	RS232, parameterisable under Windows®	
Connecting cables	Connection to PC: cab-las4/PC or cab-4/USB or cab-4/ETH Connection to PLC: cab-las8/SPS or cab-las8/SPS-w Connecting cable transmitter/receiver: cab-las4-male	
Output polarity	bright/dark switching, can be switched under Windows®	

Dimensions

L-LAS-TB-75-T-AL
(Transmitter)

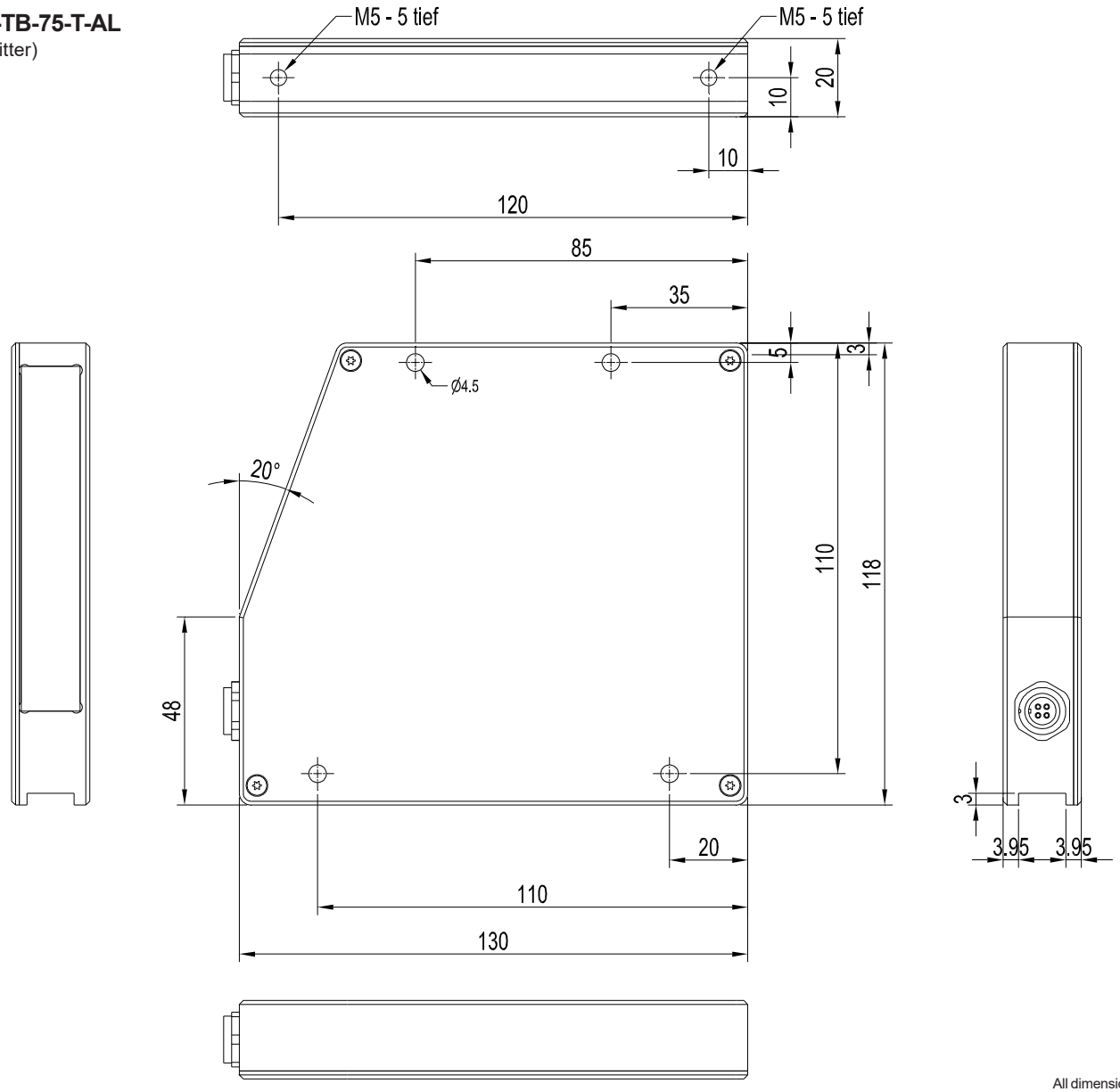

All dimensions in mm

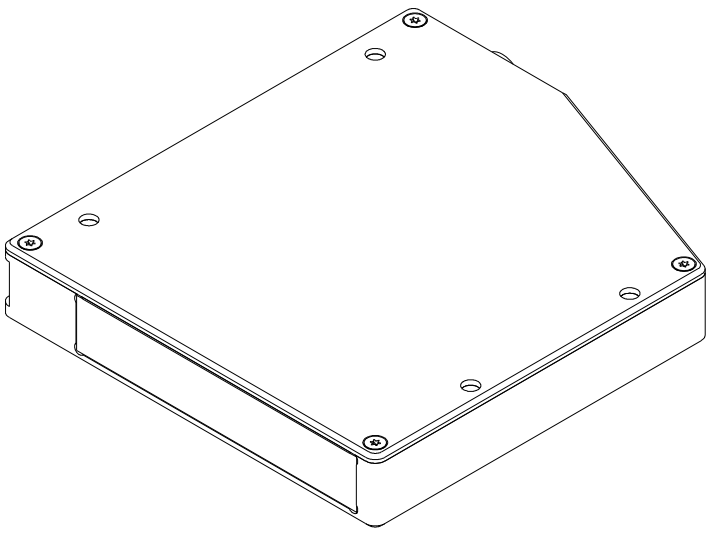

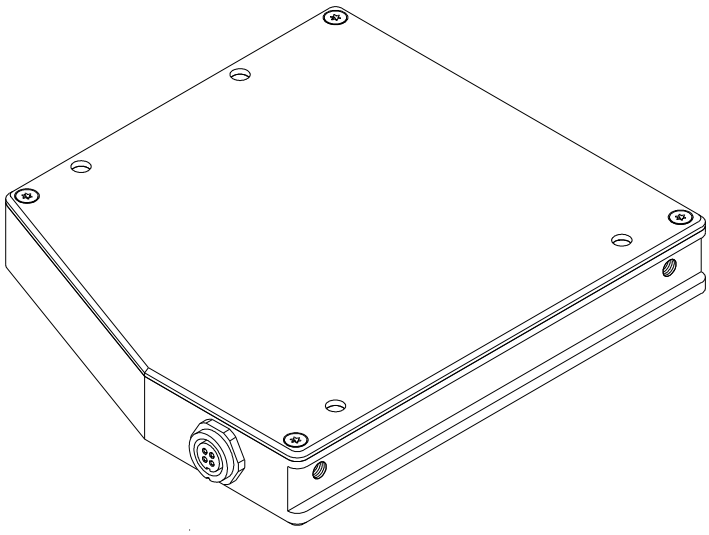

Dimensions

L-LAS-TB-75-R-AL
L-LAS-TB-75-R-4/20-AL
(Receiver)

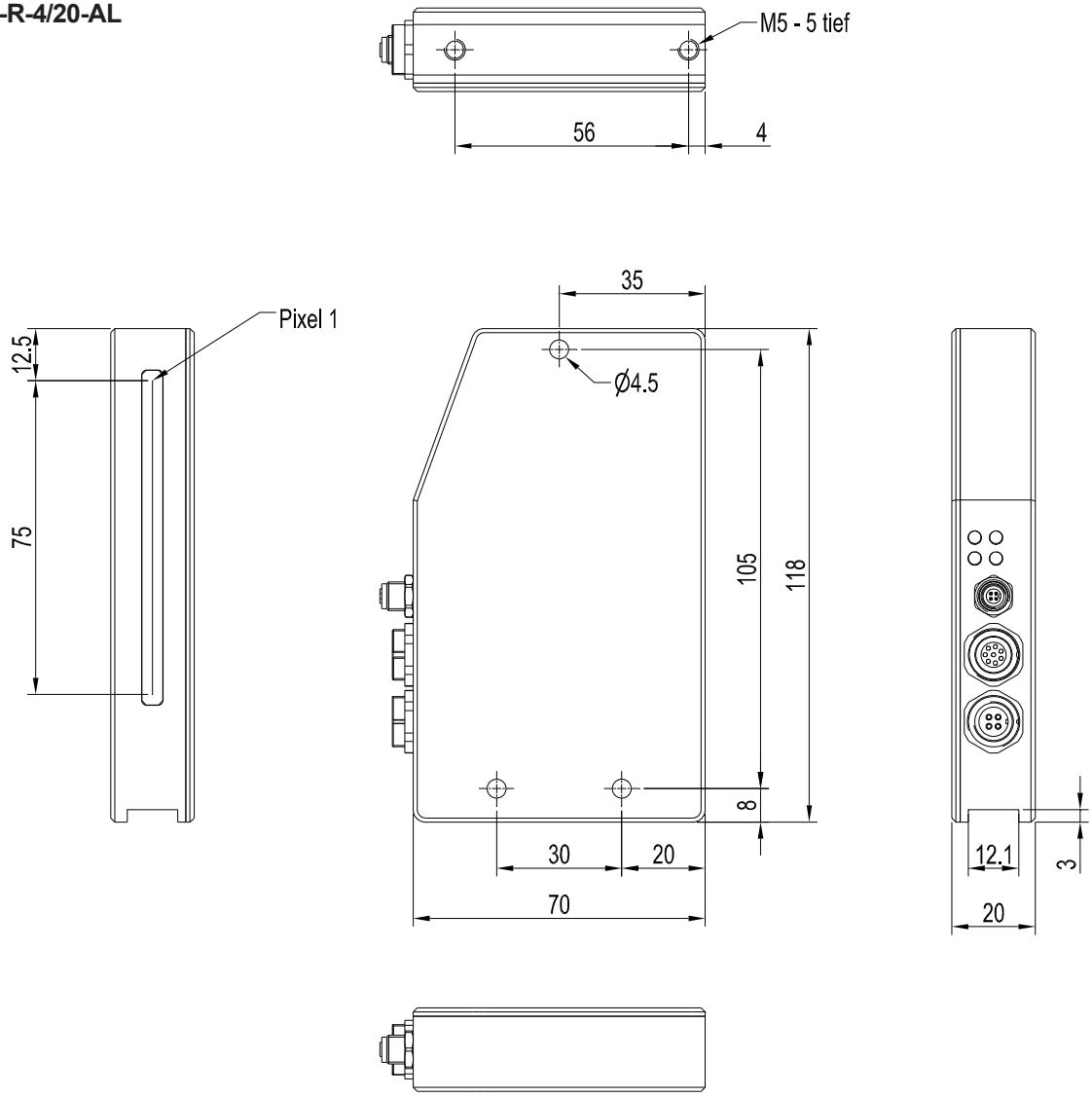

All dimensions in mm

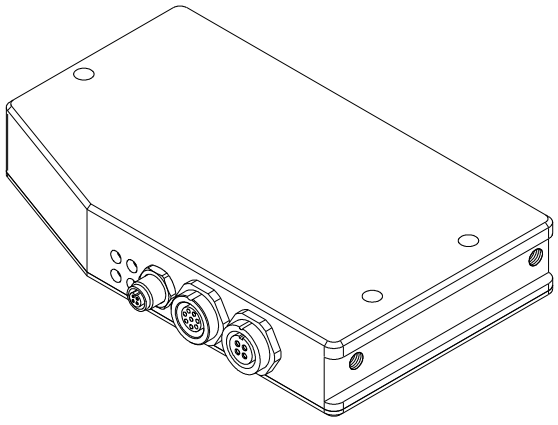

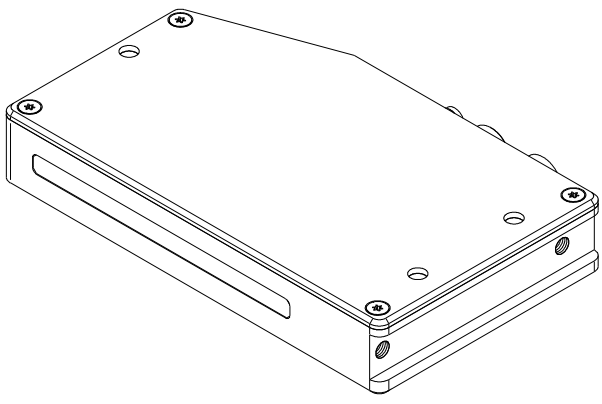

Connector Assignment

Connection L-LAS-TB-75-R-AL or L-LAS-TB-75-R-4/20-AL (Receiver) to PLC:
8-pole fem. connector Binder Series 712

Pin:	Color:	Assignment:
1	white	GND (0V)
2	brown	+24VDC (± 10%)
3	green	IN0 (EXT TRIGGER)
4	yellow	IN1 (TEACH / RESET)
5	grey	OUT0 (-)
6	pink or black	OUT1 (+)
7	blue	OUT2 (ok)
8	red	ANA (0...+10V)
		for version -4/20: ANA (4...20mA)

Connecting cable:
cab-las8/SPS-(length) or
cab-las8/SPS-w-(length) (angle type 90°)
(standard length 2m)

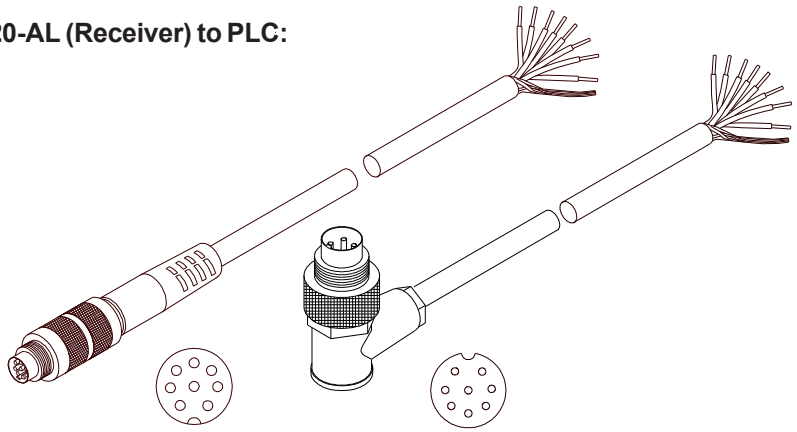

cab-las8/SPS-...
(max. length 25m,
outer jacket: PUR)

cab-las8/SPS-w-...
(max. length 25m,
outer jacket: PUR)

Connection L-LAS-TB-75-R-AL or L-LAS-TB-75-R-4/20-AL (Receiver) to PC:
4-pole fem. connector Binder Series 707

Pin:	Assignment:
1	+24VDC (+Ub, OUT)
2	GND (0V)
3	RxD
4	TxD

Connection via RS232 interface at the PC:
Connecting cable:
cab-las4/PC-(length)
cab-las4/PC-w-(length) (angle type 90°)
(standard length 2m)

alternative:
Connection via USB interface at the PC:
USB converter (incl. driver software):
cab-4/USB-(length)
cab-4/USB-w-(length) (angle type 90°)
(standard length 2m)

alternative:
Connection to local network via Ethernet bus:
Ethernet converter (incl. software „SensorFinder“):
cab-4/ETH-500
(standard length 0.5m)

Optional: External CAT5 cable, e.g.
cab-eth/M12D-RJ45-flx-(length)

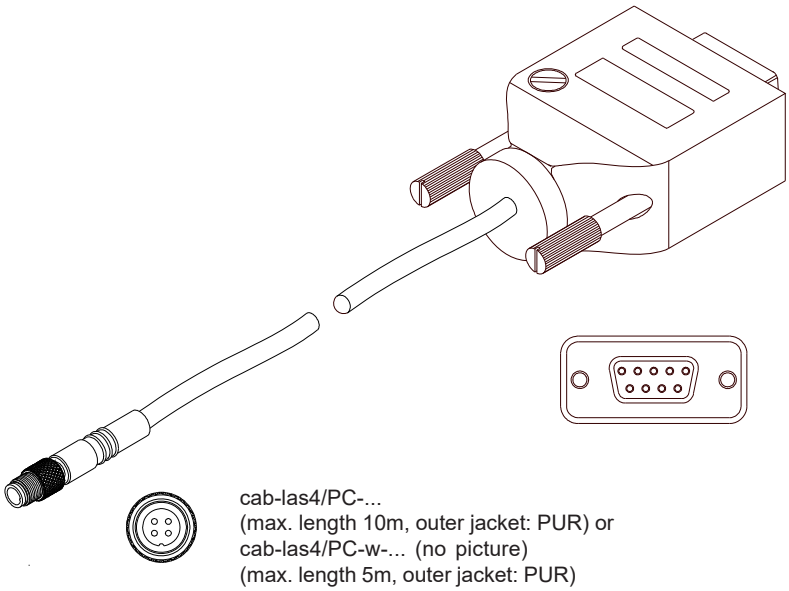

cab-las4/PC-...
(max. length 10m, outer jacket: PUR) or
cab-las4/PC-w-... (no picture)
(max. length 5m, outer jacket: PUR)

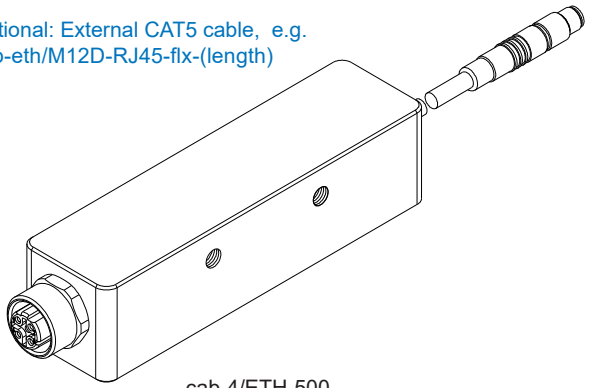

cab-4/ETH-500
(length 0.5m, outer jacket: PUR)
4-pole M12 fem. conn. (D-coded)
for connection of an external
CAT5 cable, e.g.
cab-eth/M12D-RJ45-flx-(length)

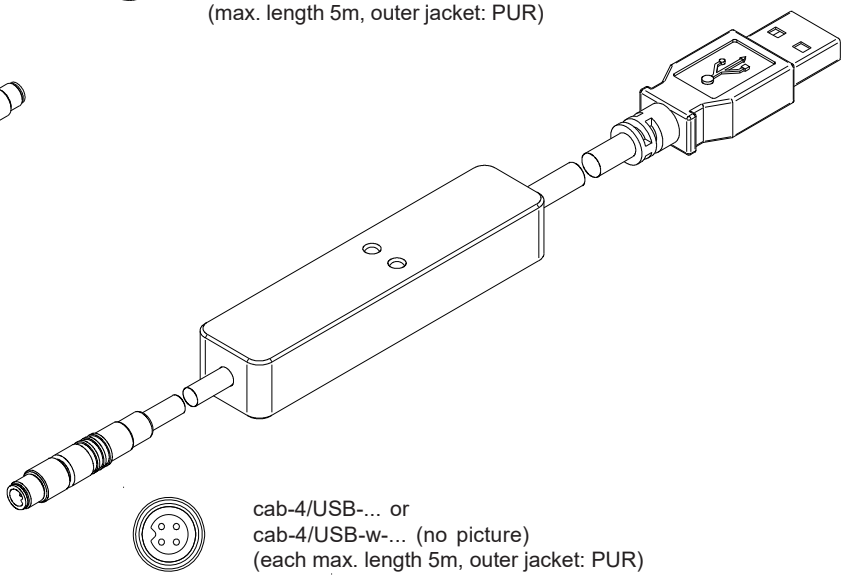

cab-4/USB-... or
cab-4/USB-w-... (no picture)
(each max. length 5m, outer jacket: PUR)

Connector Assignment

Connection L-LAS-TB-75-T-AL (Transmitter)
with L-LAS-TB-75-R-AL or L-LAS-TB-75-R-4/20-AL (Receiver)
4-pole female connector Binder Series 712

Pin:	Assignment:
1	+5VDC
2	0V (GND)
3	I-CONTROL (0V ... +5V)
4	not connected

Connecting cable:
cab-las4-male-(length)
cab-las4-male-w-(length) (angle type 90°)
(standard length 2m)

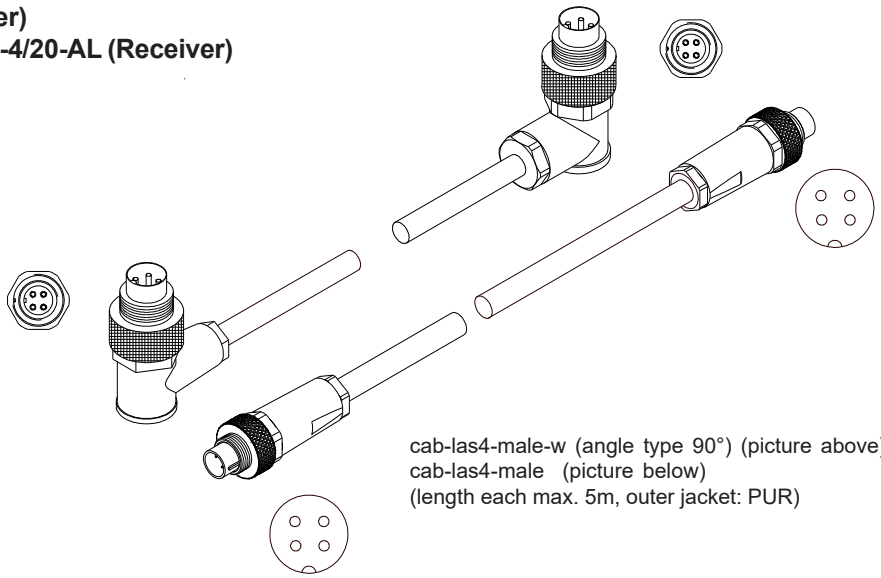

cab-las4-male-w (angle type 90°) (picture above) or
cab-las4-male (picture below)
(length each max. 5m, outer jacket: PUR)

LED Display

L-LAS-TB-75-R-AL or
L-LAS-TB-75-R-4/20-AL
(Receiver)

LED display:

(+) **Power**

(-) **(ok)**

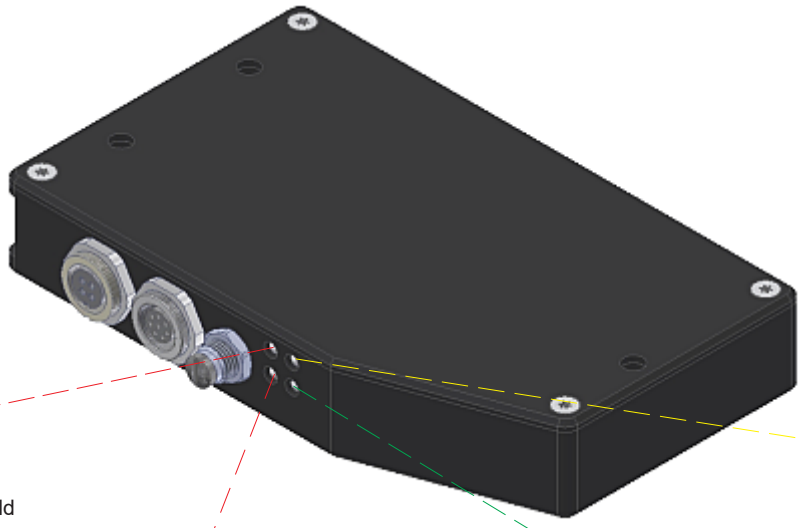

LED red (+):
Measuring value
> upper tolerance threshold
(OUT1)

LED yellow:
Power LED
(multifunctional)

LED red (-):
Measuring value
< lower tolerance threshold
(OUT0)

LED green (ok):
Measuring value within
tolerance window
(OUT2)

Laser Information

The laser transmitters of L-LAS-TB series comply with laser class 1 according to EN 60825-1. Under reasonably foreseeable conditions a class 1 laser is safe. The reasonably foreseeable conditions are kept during specified normal operation. The use of these laser transmitters therefore requires no additional protective measures.

The laser transmitters of L-LAS-TB series series are supplied with an information label „CLASS 1 Laser Product“.



Class 1 Laser Product
IEC 60825-1: 2014
P<0.39 mW; λ=670 nm
COMPLIES WITH 21 CFR 1040.10 AND 1040.11 EXCEPT FOR CONFORMANCE WITH IEC 60825-1 ED. 3, AS DESCRIBED IN LASER NOTICE NO. 56, DATED MAY 8, 2019.

Parameterization

Windows® user interface:

(The current software version is available for download on our website.)

The L-LAS-TB-75-AL sensor can be easily parameterised with the Windows® user interface L-LAS-TB-Scope (as of V5.5).
For this purpose the sensor is connected to the PC with the serial interface cable cab-las4/PC (or cab-4/USB or cab-4/ETH).
When parameterisation is finished, the PC can be disconnected again.

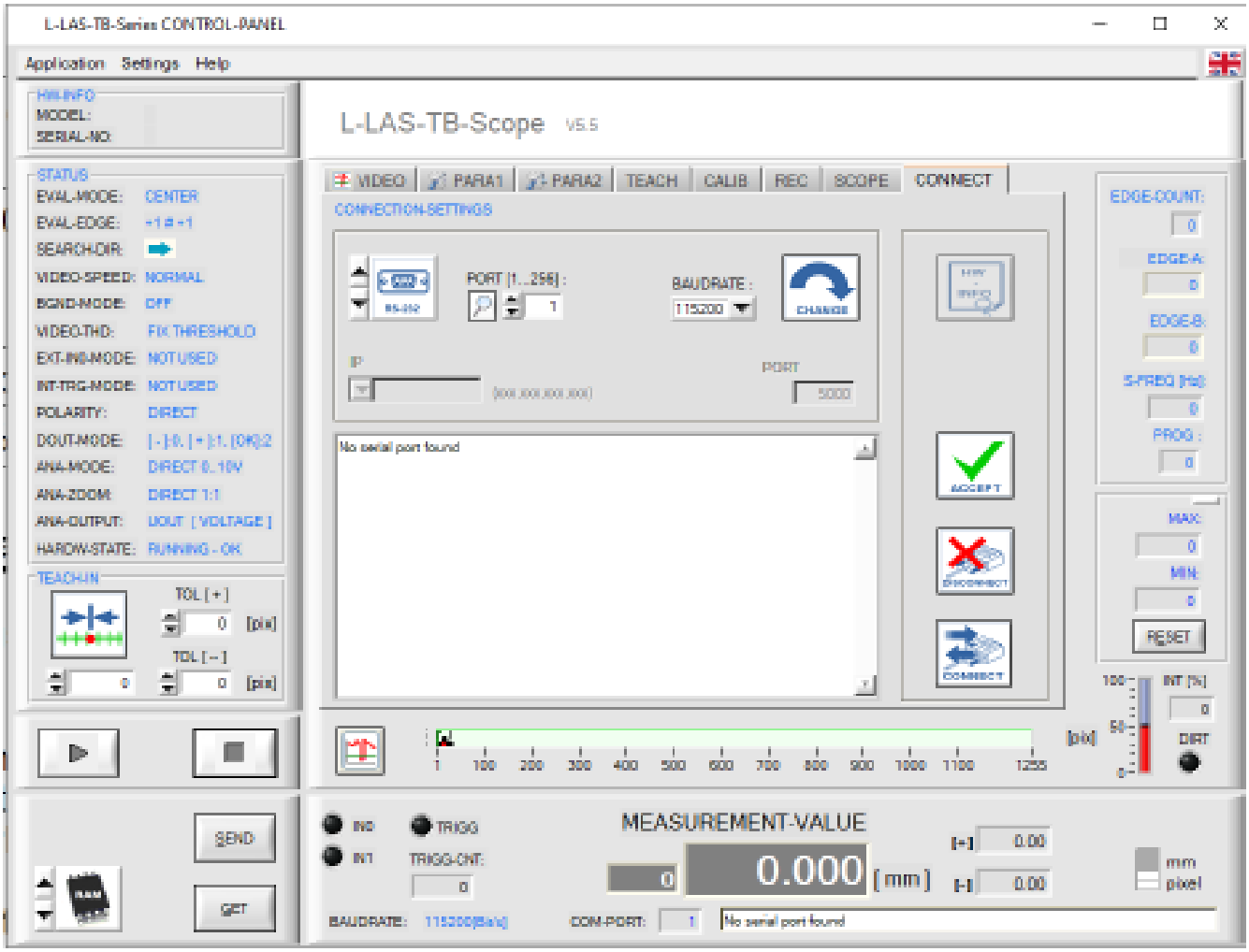

With the help of the L-LAS-TB-Scope software the following settings can be made at the sensor:

- Setting of laser power and type of automatic power correction
- Polarity of digital outputs
- Different evaluation modes
- Start of the teach process by software button
- Setting of tolerance ranges for monitoring the measured value
- Selection of scan frequency

Furthermore, various numerical and graphical measured quantities can be visualized with the L-LAS-TB-Scope software. For example, the raw data of the CCD line sensor can be displayed graphically and numerically.

Accessories

Mounting plate for L-LAS-TB-75-T-AL (Transmitter) and L-LAS-TB-75-R-AL or L-LAS-TB-75-R-4/20-AL (Receiver):
(please order separately)

TRA-L-LAS-TB-CL-L400 (total length 400 mm, max. transmitter/receiver distance cf. chart below)
TRA-L-LAS-TB-CL-L600 (total length 600 mm, max. transmitter/receiver distance cf. chart below)
TRA-L-LAS-TB-CL-L800 (total length 800 mm, max. transmitter/receiver distance cf. chart below)
(Aluminium housing, anodized in black)

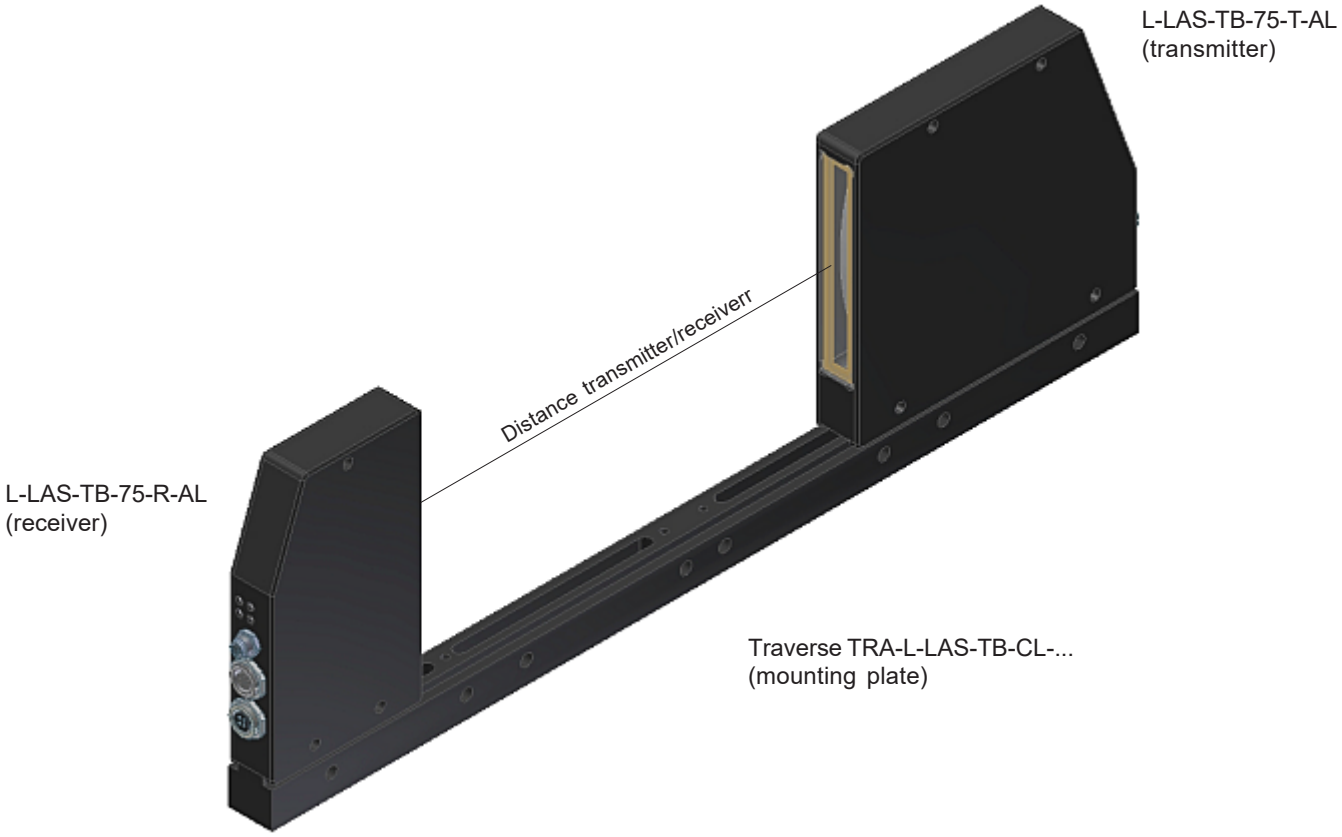

Max. distance T/R in case of use of mounting plate:	**TRA-L-LAS-TB-CL-L200**	**TRA-L-LAS-TB-CL-L400**	**TRA-L-LAS-TB-CL-L600**	**TRA-L-LAS-TB-CL-L800**
L-LAS-TB-6-T-AL **L-LAS-TB-6-R-AL**	max. distance T/R: 95 mm	max. distance T/R: 295 mm	max. distance T/R: 495 mm	max. distance T/R: 695 mm
L-LAS-TB-(16)-T-AL **L-LAS-TB-(16)-R-AL**	max. distance T/R: 60 mm	max. distance T/R: 260 mm	max. distance T/R: 460 mm	max. distance T/R: 660 mm
L-LAS-TB-28-T-AL **L-LAS-TB-28-R-AL**	-----	max. distance T/R: 222 mm	max. distance T/R: 422 mm	max. distance T/R: 622 mm
L-LAS-TB-50-T-AL **L-LAS-TB-50-R-AL**	-----	max. distance T/R: 205 mm	max. distance T/R: 405 mm	max. distance T/R: 605 mm
L-LAS-TB-75-T-AL **L-LAS-TB-75-R-AL**	-----	max. distance T/R: 200 mm	max. distance T/R: 400 mm	max. distance T/R: 600 mm
L-LAS-TB-100-T-AL **L-LAS-TB-100-R-AL**	-----	max. distance T/R: 160 mm	max. distance T/R: 360 mm	max. distance T/R: 560 mm

Accessories

Blast air top part:

ABL-TB-75-CL
(Plastic housing, black, please order separately for each transmitter and receiver)

suitable for:
L-LAS-TB-75-T-AL (Transmitter) **and**
L-LAS-TB-75-R-AL or L-LAS-TB-75-R-4/20-AL (Receiver)

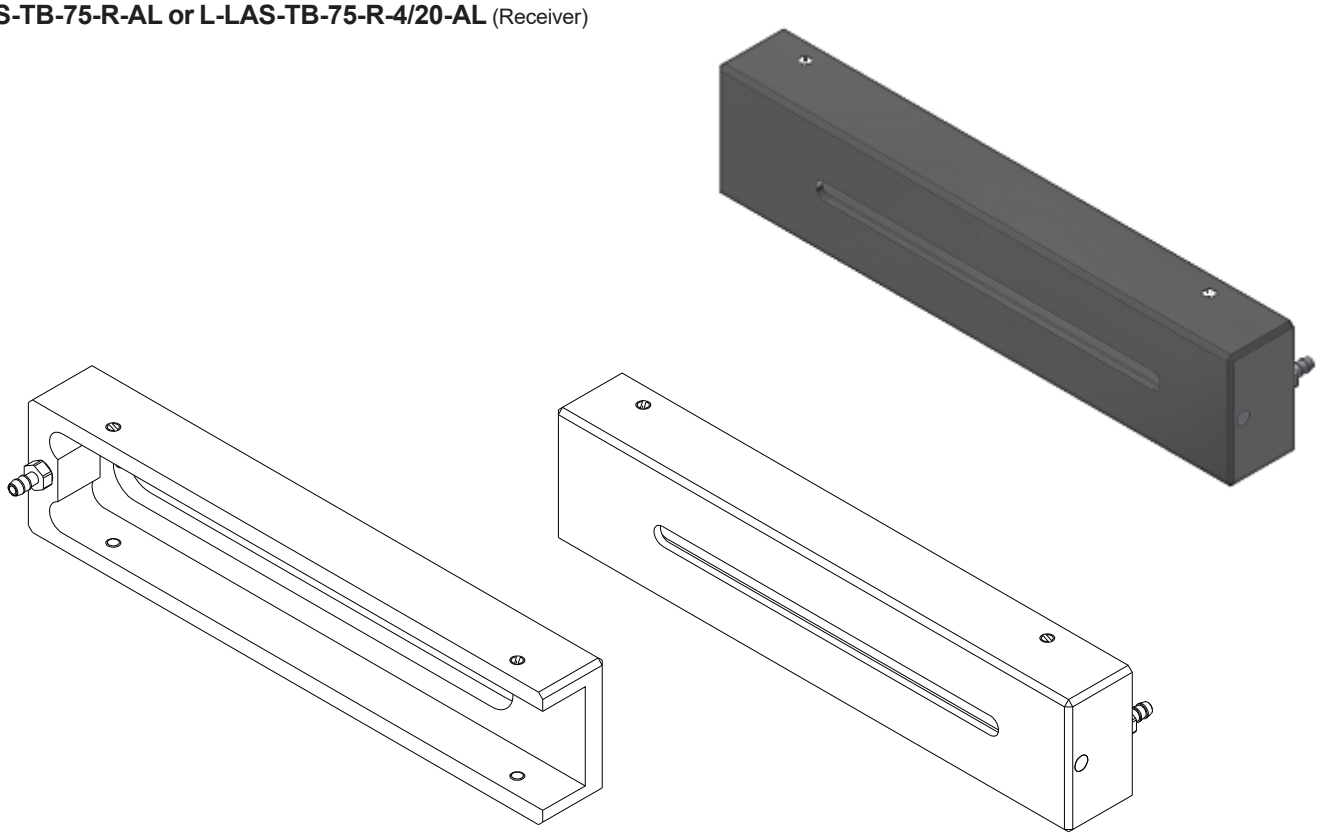

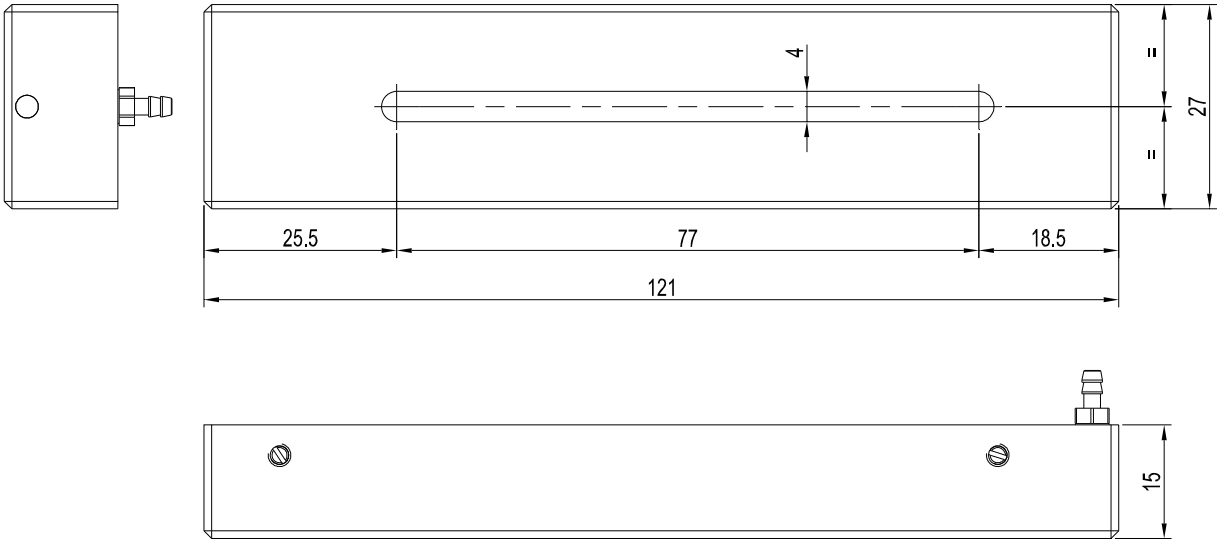

All dimensions in mm