L-LAS Series

L-LAS-TB-F-150/60-MO + macro lens
L-LAS-TB-F-150/60-MO-4/20 + macro lens

- Line laser <0.39 mW, wave length 670 nm, laser class 1
- Visible laser line (red light 670 nm), typ. 17 mm x 2 mm
- Different macro lenses are available
- Reference distance receiver/object: typ. 70 mm or 80 mm
- Meas. range approx. 1 mm ... 8 mm (depends on macro lens)
- Resolution typ. 0.125 µm ... 1.0 µm (depends on macro lens)
- CCD line detector with 1024 pixel, 8192 subpixel (8-fold)
- External teach button and potentiometer for tolerance setting
- RS232 interface (USB or Ethernet converter available)
- 2 digital inputs, 3 digital outputs
- 1 analog output 0 ... +10V (or optional 4 ... 20mA)
- Switching state indication by 4 LEDs (1x grn, 2x red, 1x yel)



Picture:
L-LAS-TB-F-150/60-MO
with macro lens MO-J-4x/20

Design

Product name:

L-LAS-TB-F-150/60-MO
L-LAS-TB-F-150/60-MO-4/20
(incl. Windows® PC software L-LAS-TB-Scope V4.1 SV_MO)

4/20 = Analog output 4 ... 20mA

Available macro lenses:
(please order separately):
MO-J-8x/9
MO-J-6x/13
MO-J-4x/20
MO-J-2x/26
MO-J-1x/50

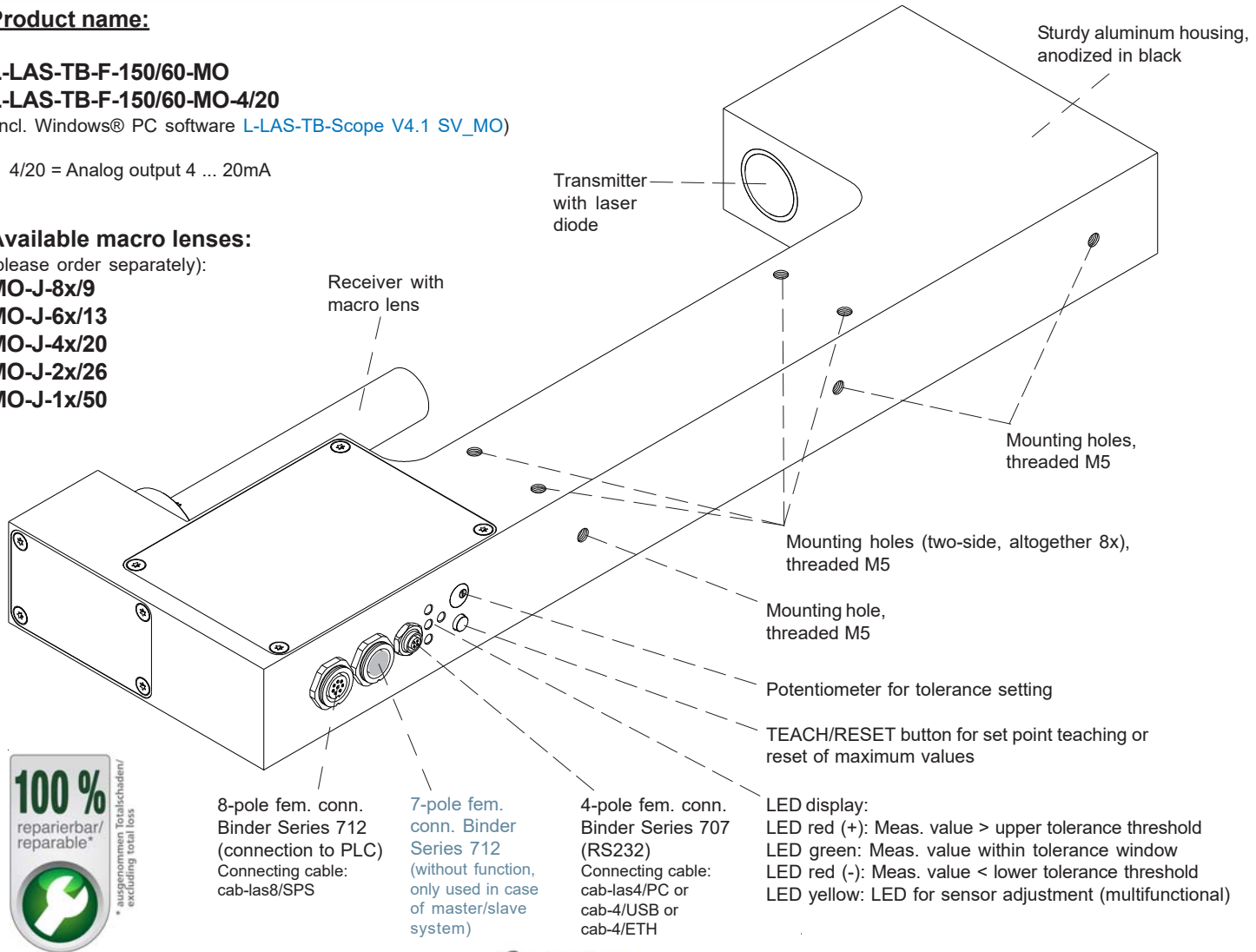

100 % reparierbar/ reparable*
* ausgenommen Totalschaden/ excluding total loss

Technical Data

Type	L-LAS-TB-F-150/60-MO	L-LAS-TB-F-150/60-MO-4/20
Transmitter	Semi conductor laser, 670 nm, DC operation, <0.39 mW max. optical power, laser class 1 acc. to DIN EN 60825-1. The use of these laser transmitters therefore requires no additional protective measures.	
Receiver	CCD line detector with 1024 pixels, 8192 subpixels	
Available macro lenses	MO-J-8x/9, MO-J-6x/13, MO-J-4x/20, MO-J-2x/26, MO-J-1x/50	
Reference distance receiver/object depends on the macro lens used	with MO-J-8x/9, MO-J-6x/13, MO-J-4x/20 or MO-J-2x/26: each typ. 70 mm with MO-J-1x/50: typ. 80 mm	
Measuring range depends on the macro lens used	with MO-J-8x/9: typ. 1 mm with MO-J-6x/13: typ. 1.3 mm with MO-J-4x/20: typ. 2 mm with MO-J-2x/26: typ. 4 mm with MO-J-1x/50: typ. 8 mm	
Resolution/reproducibility depends on the macro lens used	with MO-J-8x/9: resolution typ. 0,125 µm, reproducibility typ. ± 0,125 µm with MO-J-6x/13: resolution typ. 0,165 µm, reproducibility typ. ± 0,165 µm with MO-J-4x/20: resolution typ. 0,25 µm, reproducibility typ. ± 0,25 µm with MO-J-2x/26: resolution typ. 0,5 µm, reproducibility typ. ± 0,5 µm with MO-J-1x/50: resolution typ. 1 µm, reproducibility typ. ± 1 µm	
Linearity	typ. 0.2% FSR (full scale range)	
Analog output	voltage output: 0 ... +10V	current output: 4 ... 20mA
Digital outputs (OUT0, OUT1, OUT2)	adjustable under Windows®: pnp bright-switching (pnp n.c.)/npn dark-switching (npn n.o.) or pnp dark-switching (pnp n.o.)/npn bright-switching (npn n.c.)	
Digital inputs (IN0, IN1)	IN0: External trigger, IN1: Teach/Reset (double function), input voltage +Ub/0V, with protective circuit	
Voltage supply	+24VDC (± 10%)	
Sensitivity setting	adjustable under Windows® via PC	
Laser power correction	adjustable under Windows® via PC	
Current consumption	typ. 200 mA	
Enclosure rating	IP54	
Operating temperature range	-10°C ... +50°C	
Storage temperature range	-20°C ... +85°C	
Housing material	Aluminum, anodized in black	
Housing dimensions	LxWxH approx. 350 mm x 100 mm x 34 mm (without flange connectors)	
Type of connector	8-pole fem. connector type Binder 712 (PLC/Power), 4-pole fem. connector type Binder 707 (PC/RS232)	
Teach button	Teach button an the housing for norm value teaching	
LED display	LED red (+) : Measured value > upper tolerance threshold LED green : Measured value within tolerance window LED red (-) : Measured value < lower tolerance threshold LED yellow: LED for sensor adjustment (multifunctional)	
EMC test acc. to	DIN EN 60947-5-2 CE	
Scan frequency	in analog/digital operation: max. 200 Hz	
Max. switching current	100 mA, short-circuit proof	
Interface	RS232, parameterisable under Windows®	
Connecting cable	Connection to PC: cab-las4/PC or cab-4/USB or cab-4/ETH Connection to PLC: cab-las8/SPS or cab-las8/SPS-w	

Dimensions

Dimensions
L-LAS-TB-F-150/60-MO
incl. macro lens
MO-J-8x/9 or
MO-J-6x/13 or
MO-J-4x/20

All dimensions in mm

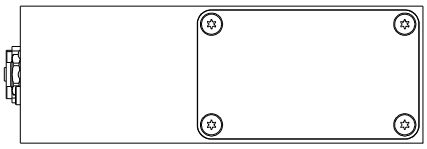

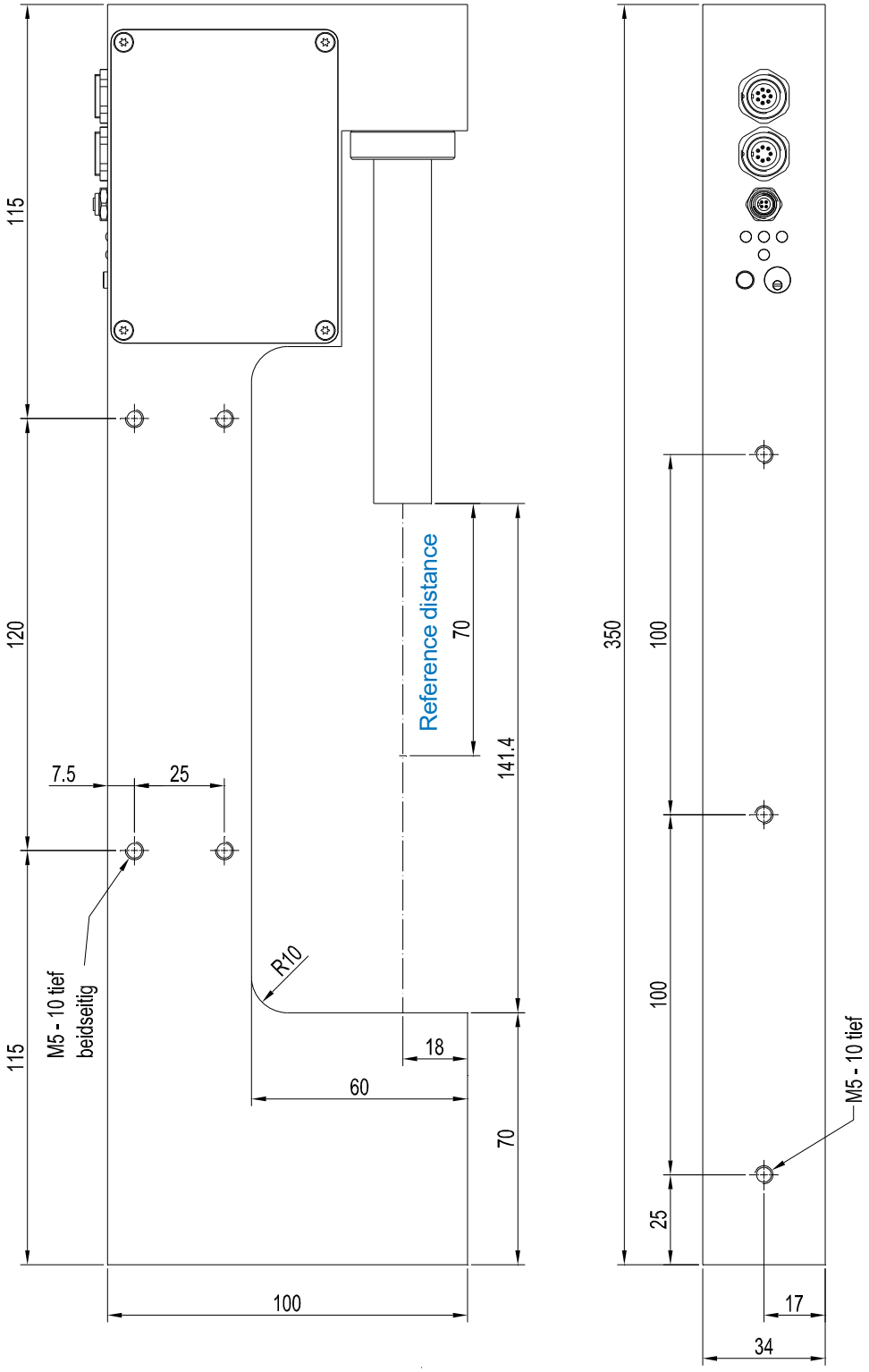

Dimensions

Dimensions
L-LAS-TB-F-150/60-MO
incl. macro lens
MO-J-2x/26

All dimensions in mm

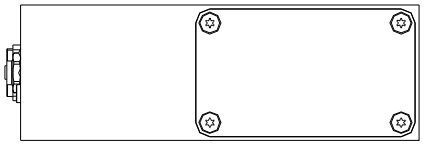

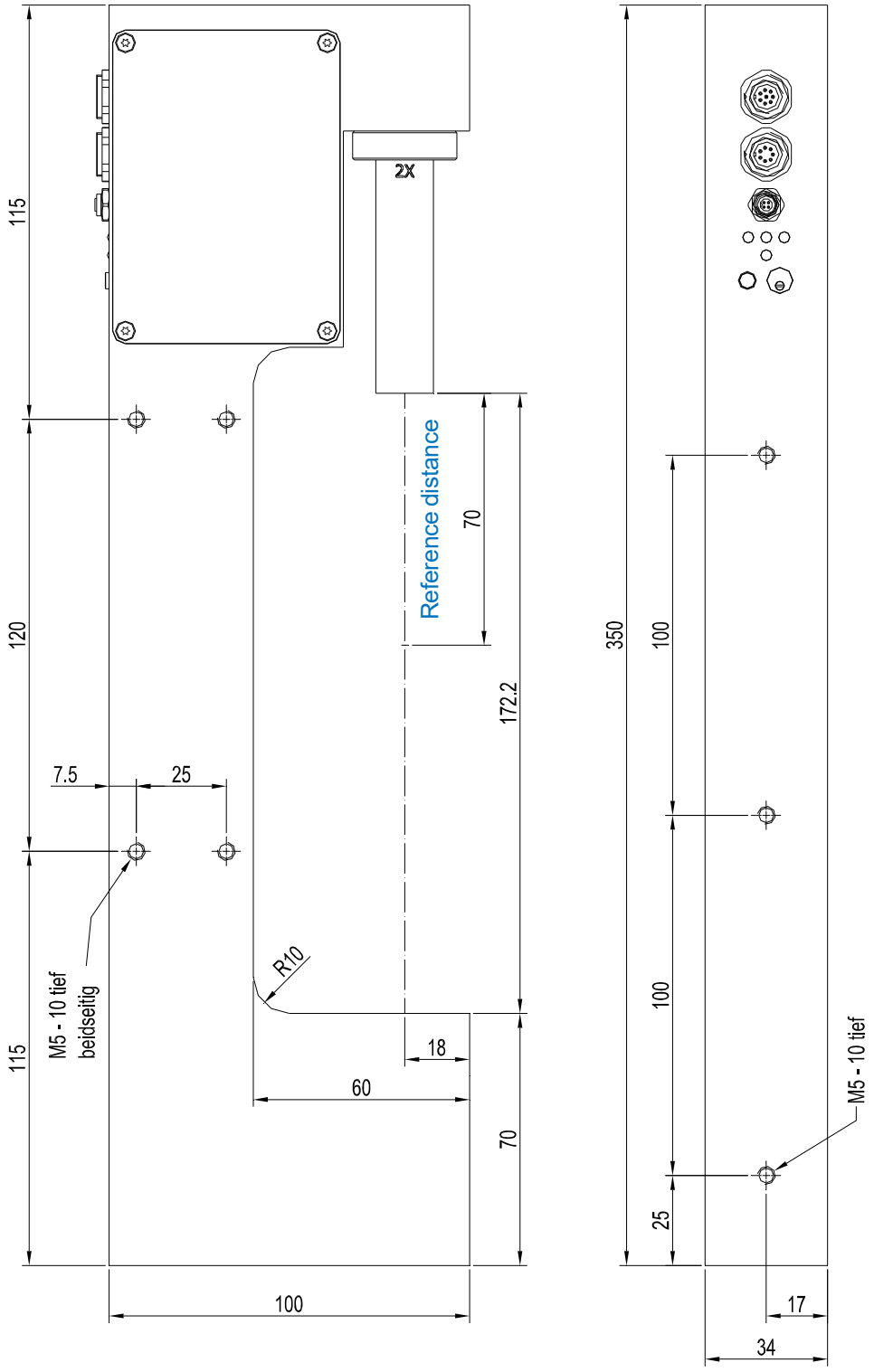

Dimensions

Dimensions
L-LAS-TB-F-150/60-MO
incl. macro lens
MO-J-1x/50

All dimensions in mm

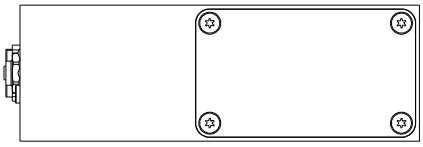

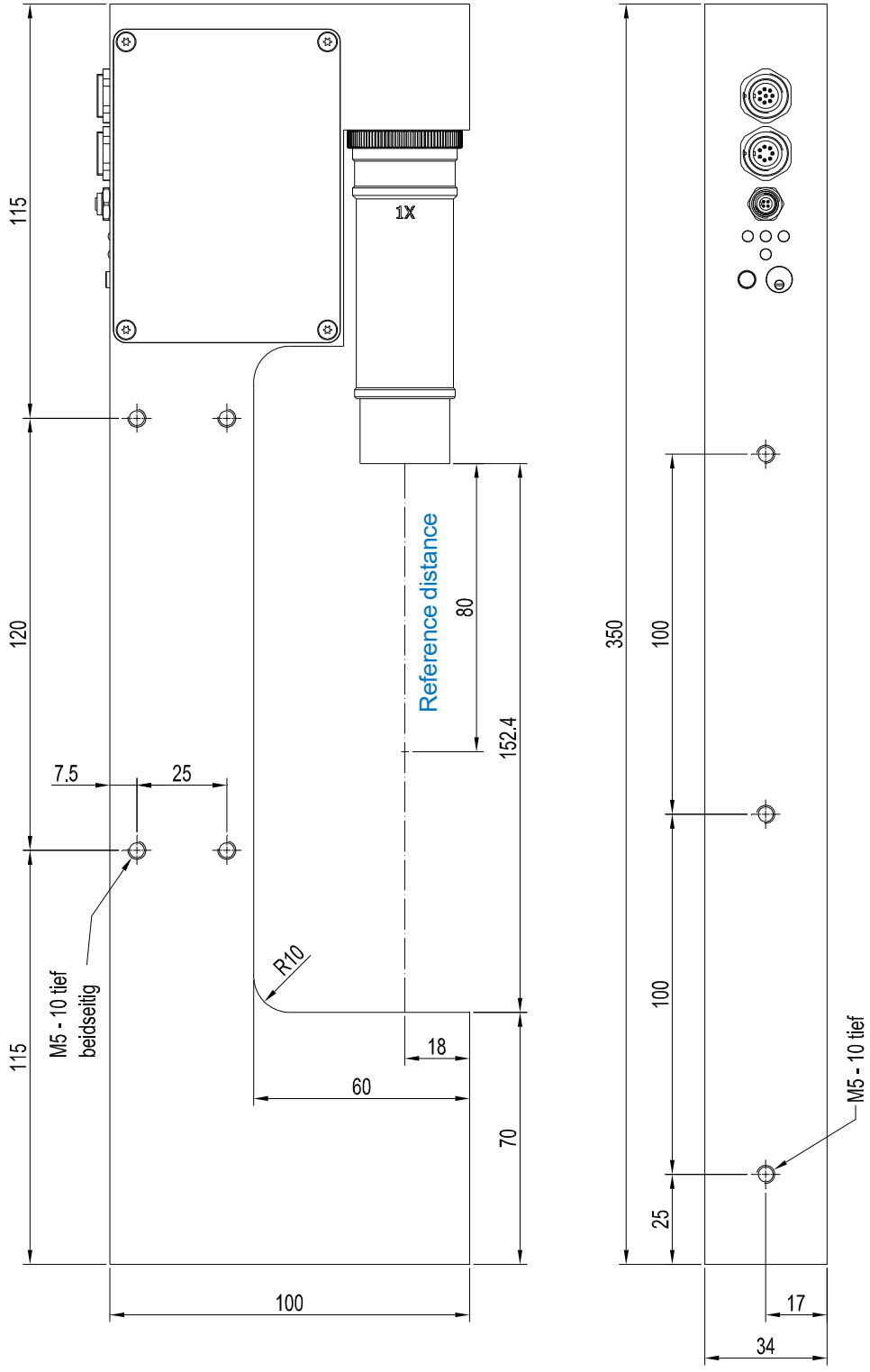

Connector Assignment

Connection to PLC:
8-pole fem. connector Binder Series 712

Pin:	Color:	Assignment:
1	white	GND (0V)
2	brown	+24VDC (± 10%)
3	green	IN0 (EXT TRIGGER)
4	yellow	IN1 (TEACH / RESET)
5	grey	OUT0 (-)
6	pink or black	OUT1 (+)
7	blue	OUT2 (OK)
8	red	ANA (0 ... +10V)
		in case of version -4/20: ANA (4 ... 20mA)

Connecting cable:
cab-las8/SPS-(length) or
cab-las8/SPS-w-(length) (angle type 90°)
(standard length 2m)

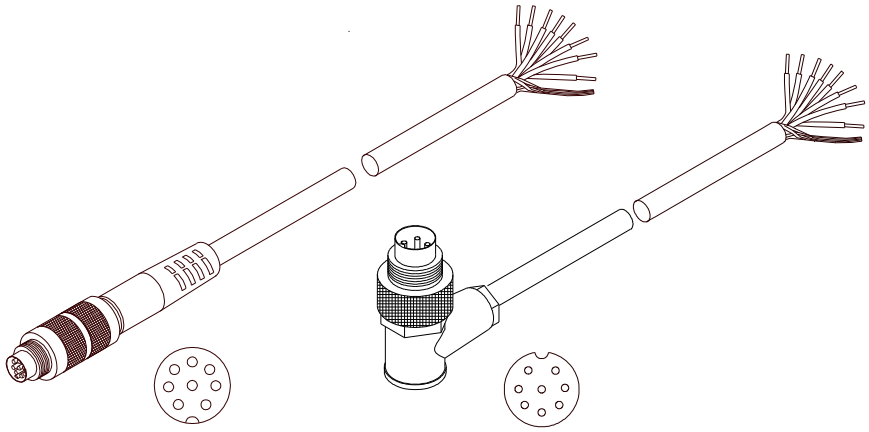

cab-las8/SPS-...
(max. length 25m, outer jacket: PUR)

cab-las8/SPS-w-...
(max. length 25m, outer jacket: PUR)

Connection to PC:
4-pole fem. connector Binder Series 707

Pin:	Assignment:
1	+24VDC (+Ub, OUT)
2	GND (0V)
3	RxD
4	TxD

Connection via RS232 interface at the PC:
Connecting cable:
cab-las4/PC-(length)
cab-las4/PC-w-(length) (angle type 90°)
(standard length 2m)

alternative:
Connection via USB interface at the PC:
USB converter (incl. driver software):
cab-4/USB-(length)
cab-4/USB-w-(length) (angle type 90°)
(standard length 2m)

alternative:
Connection to local network via Ethernet bus:
Ethernet converter (incl. software „SensorFinder“):
cab-4/ETH-500
(standard length 0.5m)

Optional:
External CAT5 cable, e.g.
cab-eth/M12D-RJ45-flx-(length)

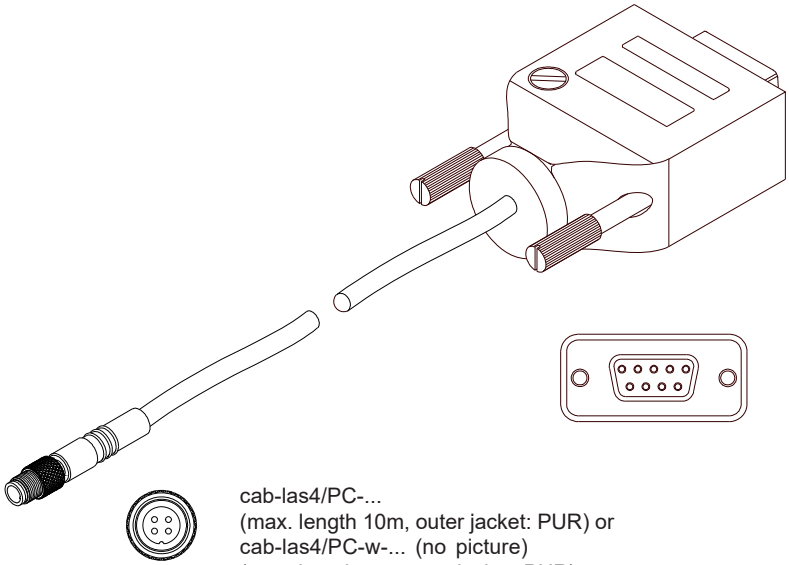

cab-las4/PC-...
(max. length 10m, outer jacket: PUR) or
cab-las4/PC-w-... (no picture)
(max. length 5m, outer jacket: PUR)

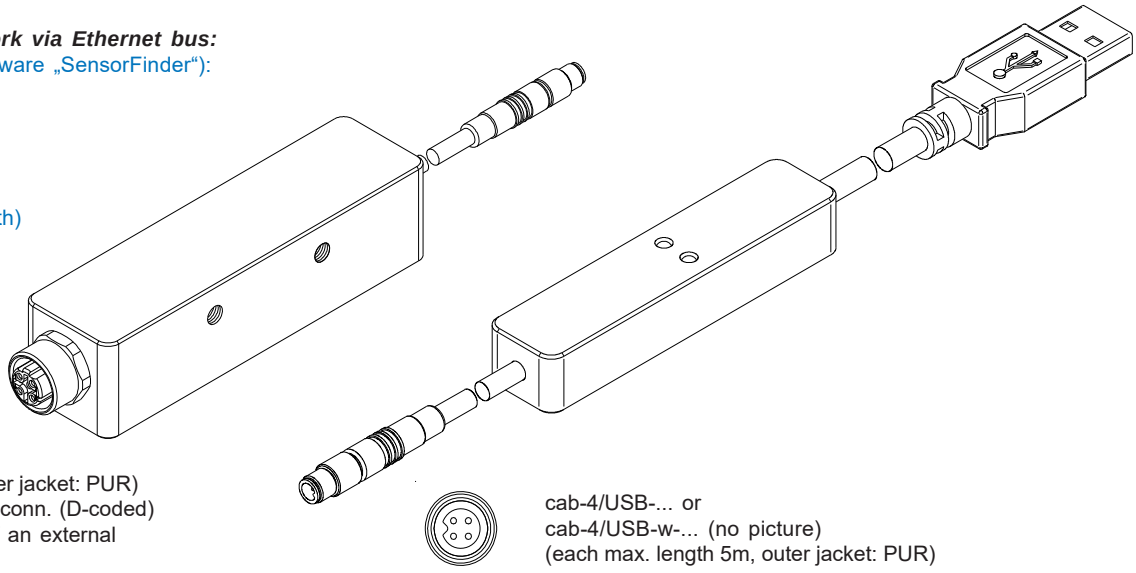

cab-4/ETH-500
(length 0.5m, outer jacket: PUR)
4-pole M12 fem. conn. (D-coded)
for connection of an external
CAT5 cable, e.g.
cab-eth/M12D-RJ45-flx-(length)

cab-4/USB-... or
cab-4/USB-w-... (no picture)
(each max. length 5m, outer jacket: PUR)

LED Display

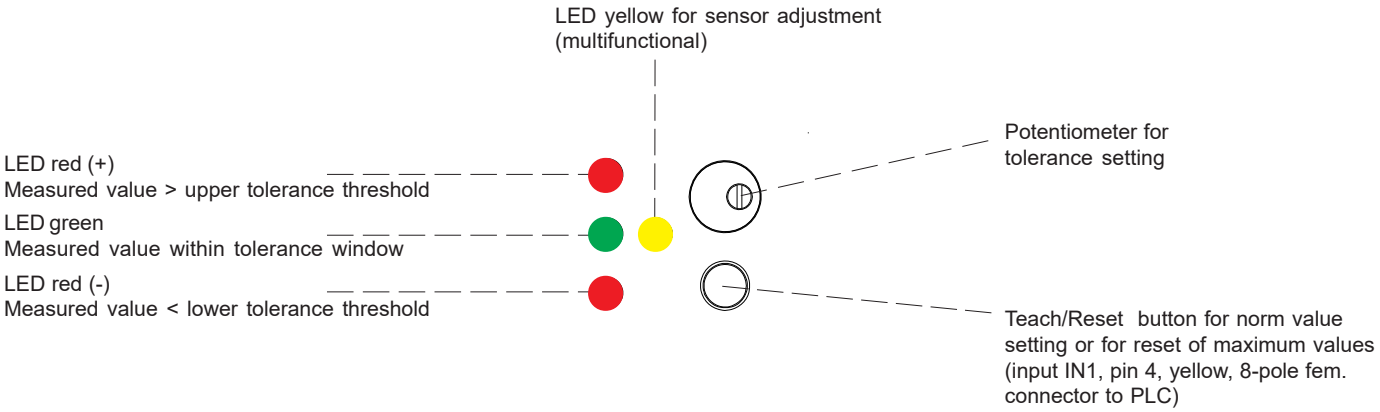

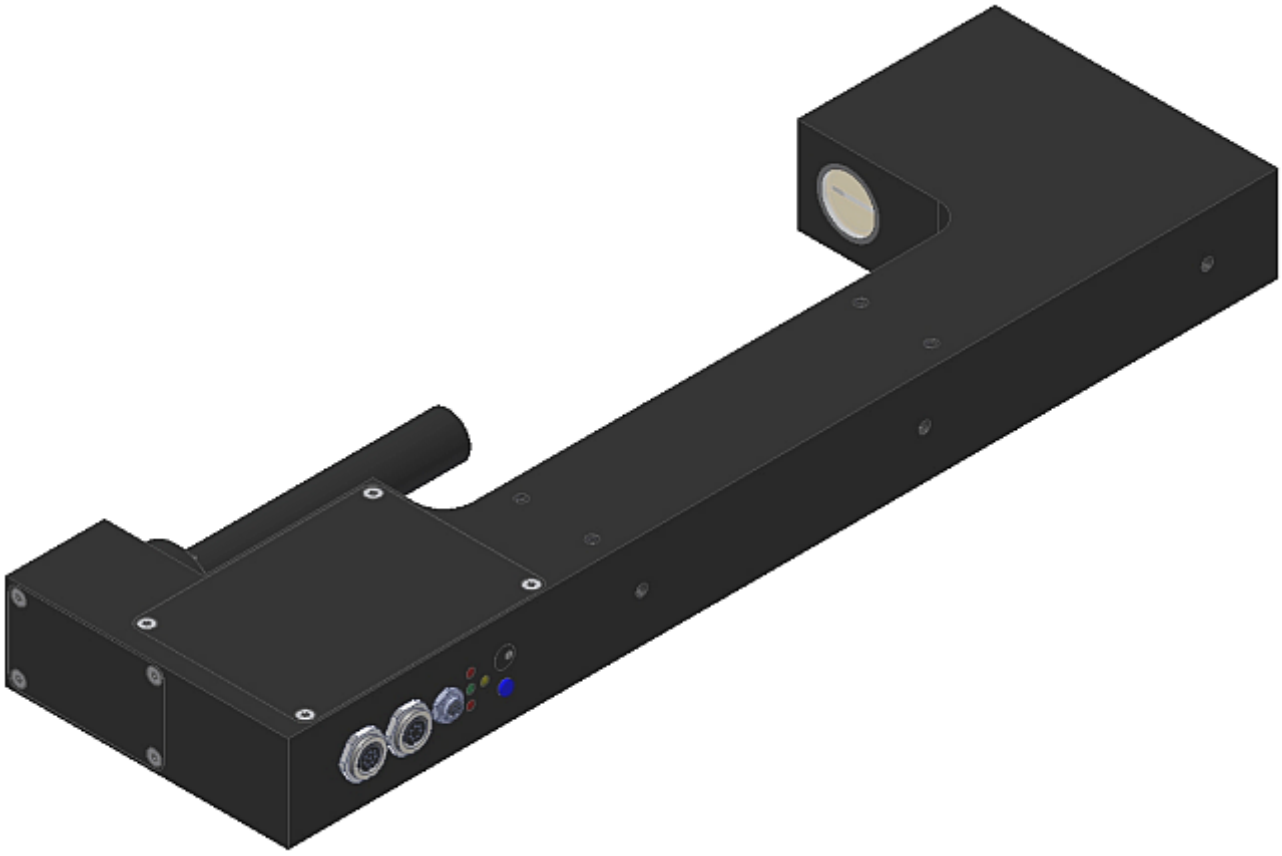

Laser Information

The laser line sensors of L-LAS-TB series comply with laser class 1 according to EN 60825-1. Under reasonably foreseeable conditions a class 1 laser is safe. The reasonably foreseeable conditions are kept during specified normal operation. The use of these laser transmitters therefore requires no additional protective measures.

The laser line sensors of L-LAS-TB series are supplied with an information label „CLASS 1 LASER PRODUCT“.

CLASS 1 LASER PRODUCT

DIN EN 60825-1: 2008-05

Parameterization

Windows® software L-LAS-TB-Scope:

The L-LAS-TB sensor can be easily parameterised with the Windows® user interface.
For this purpose the sensor is connected to the PC with the serial interface cable cab-las4/PC (or with the USB converter cab-4/USB or the Ethernet converter cab-4/ETH). When parameterisation is finished, the PC can be disconnected again.

Windows® user interface: (similar image)

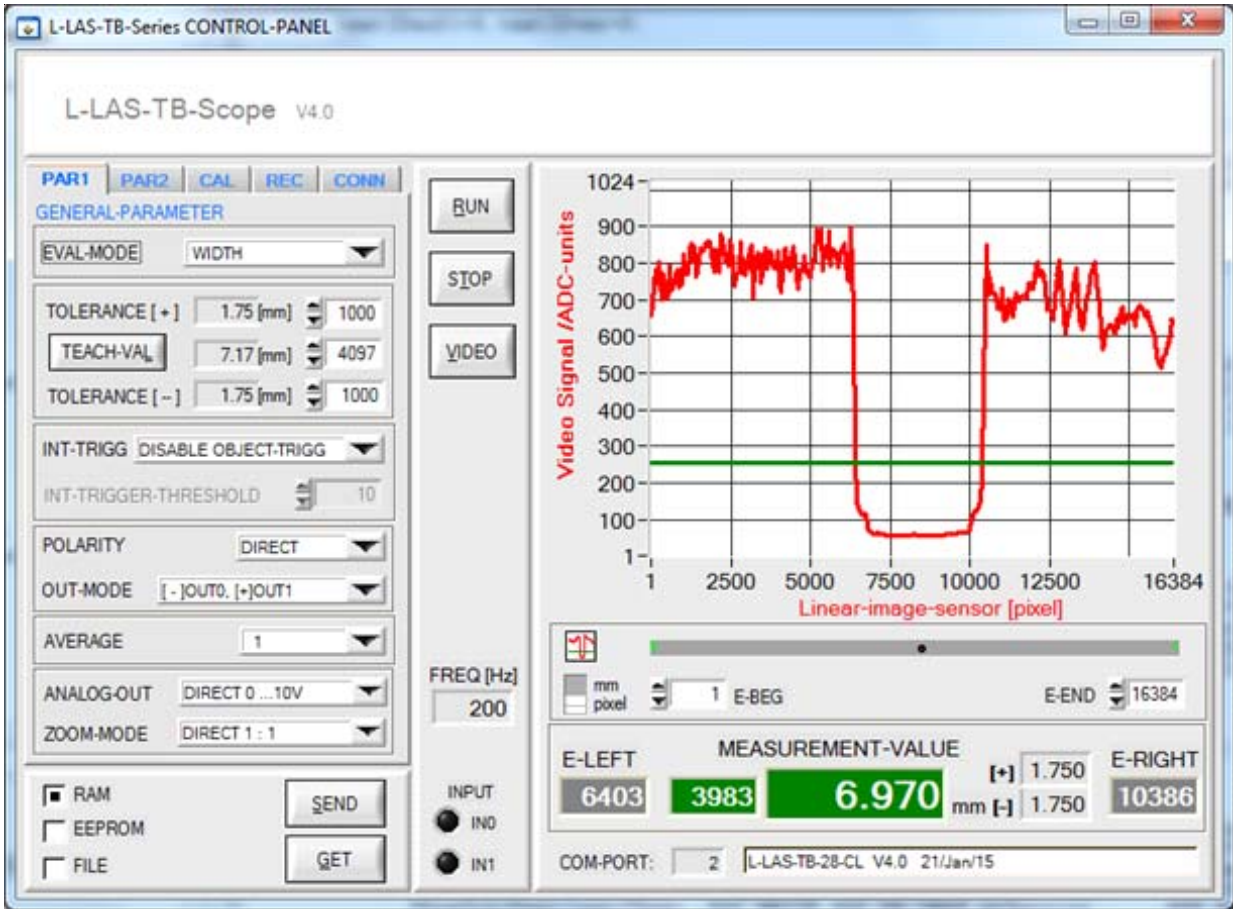

With the help of the L-LAS-TB-Scope software the following settings can be made at the sensor:

- Setting of laser power and type of automatic power correction
- Polarity of digital outputs
- Different evaluation modes
- Start of the teach process by software button
- Setting of tolerance ranges for monitoring the measured value

Furthermore, various numerical and graphical measured quantities can be visualized with the L-LAS-TB-Scope software. For example, the raw data of the CCD line sensor can be displayed graphically and numerically.

Macro Lenses

Macro lenses for L-LAS-TB-F-150/60-MO line sensors:

MO-J-8x/9
MO-J-6x/13
MO-J-4x/20
MO-J-2x/26
MO-J-1x/50

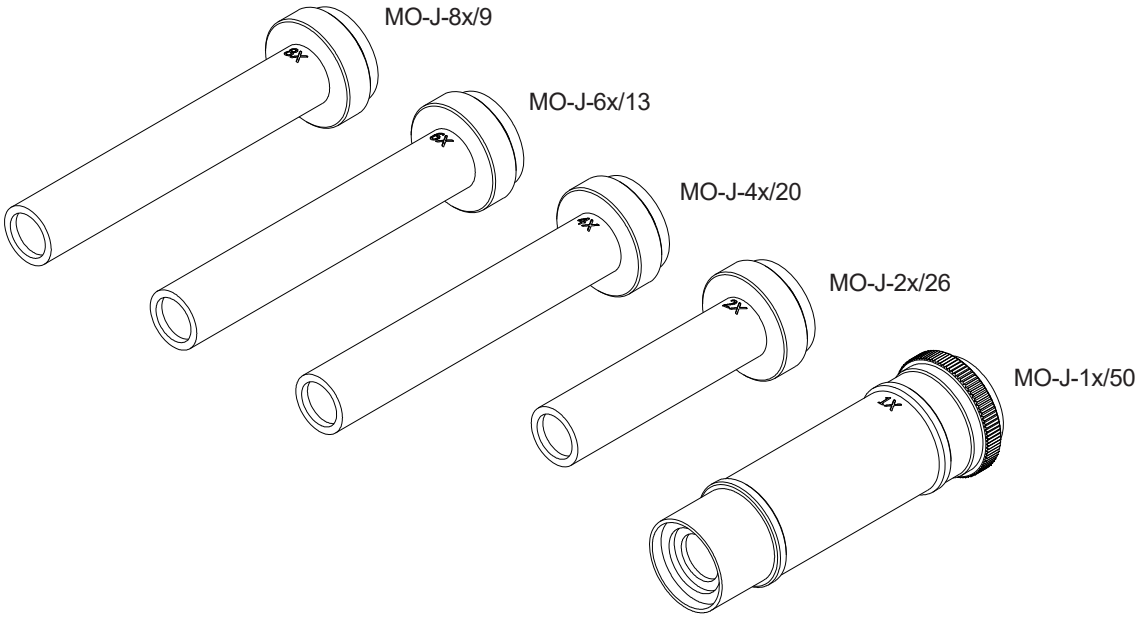

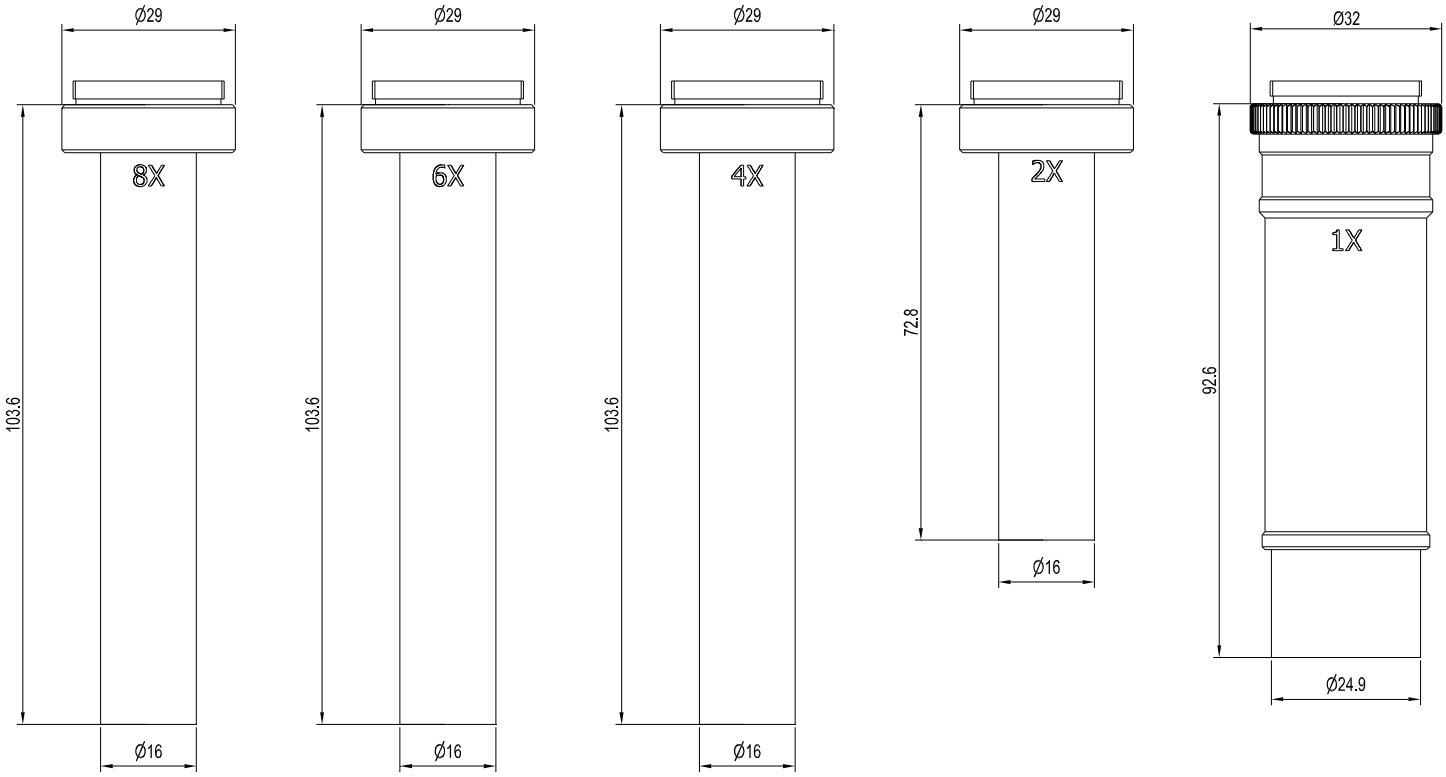

All dimensions in mm

Product Overview

Overview: L-LAS-TB-F-150/60-MO with different macro lenses

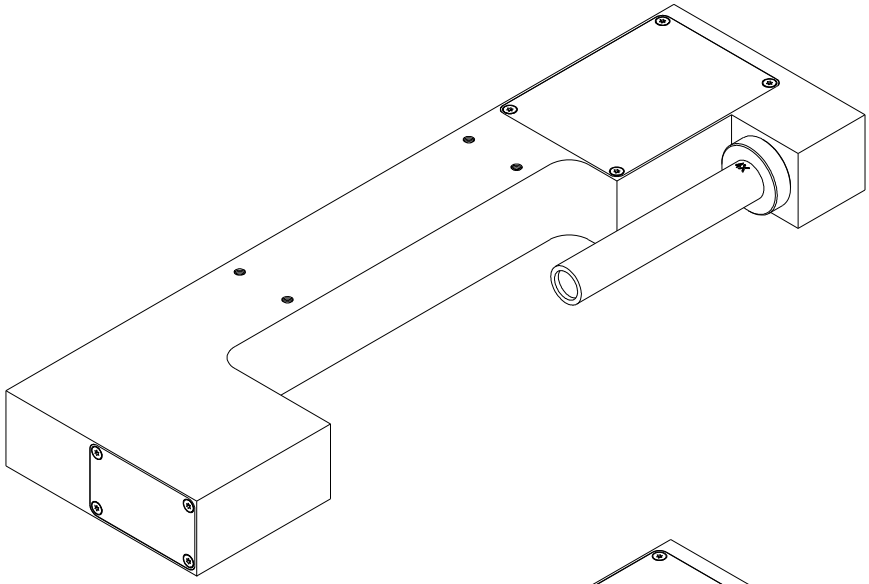

L-LAS-TB-F-150/60-MO

with MO-J-8x/9 or
with MO-J-6x/13 or
with MO-J-4x/20

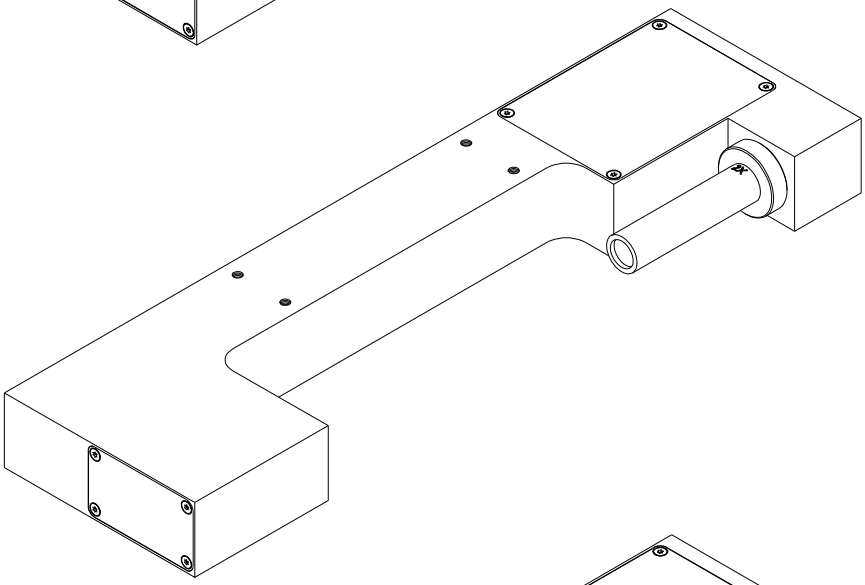

L-LAS-TB-F-150/60-MO

with MO-J-2x/26

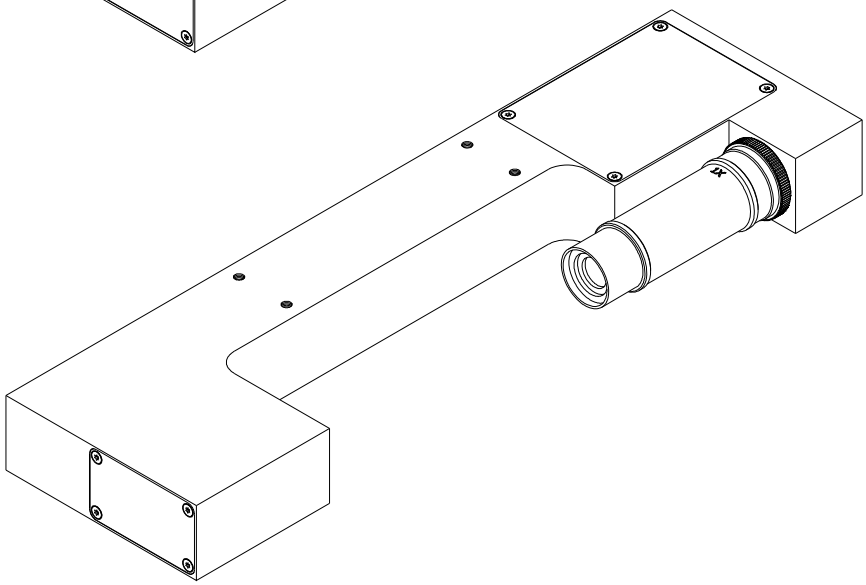

L-LAS-TB-F-150/60-MO

with MO-J-1x/50