L-LAS Series

L-LAS-TB-F-8x1-200/65-BL

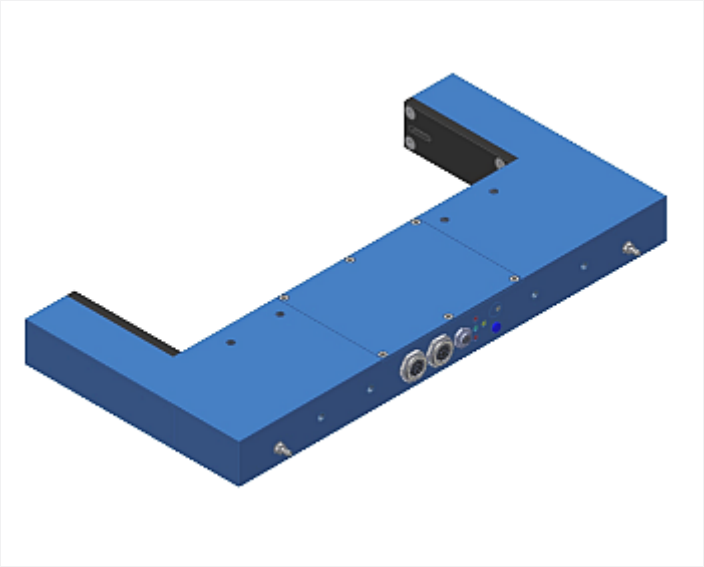

- Line laser <0.39 mW, wave length 670 nm, laser class 1
- Visible laser line, typ. 9.5 mm x 1.5 mm
- Measuring range typ. 8 mm
  Resolution typ. 1 µm
- Transmitter/receiver distance 200 mm
- Integrated interference filter
- CCD line detector with 1024 pixel, 8192 subpixel (8-fold)
- External teach button and potentiometer for tolerance setting
- RS232 interface (USB or Ethernet converter available)
- 2 digital inputs, 3 digital outputs
- 1 analog output 0 ... +10V (optional 4 ... 20mA)
- Switching state indication by 4 LEDs (1x grn, 2x red, 1x yel)
- Blast air connectors at transmitter and receiver side

Design

Product name:

L-LAS-TB-F-8x1-200/65-BL
L-LAS-TB-F-8x1-200/65-BL-4/20 (current output 4...20mA)
(incl. Windows® PC software L-LAS-TB-Scope V3.18)

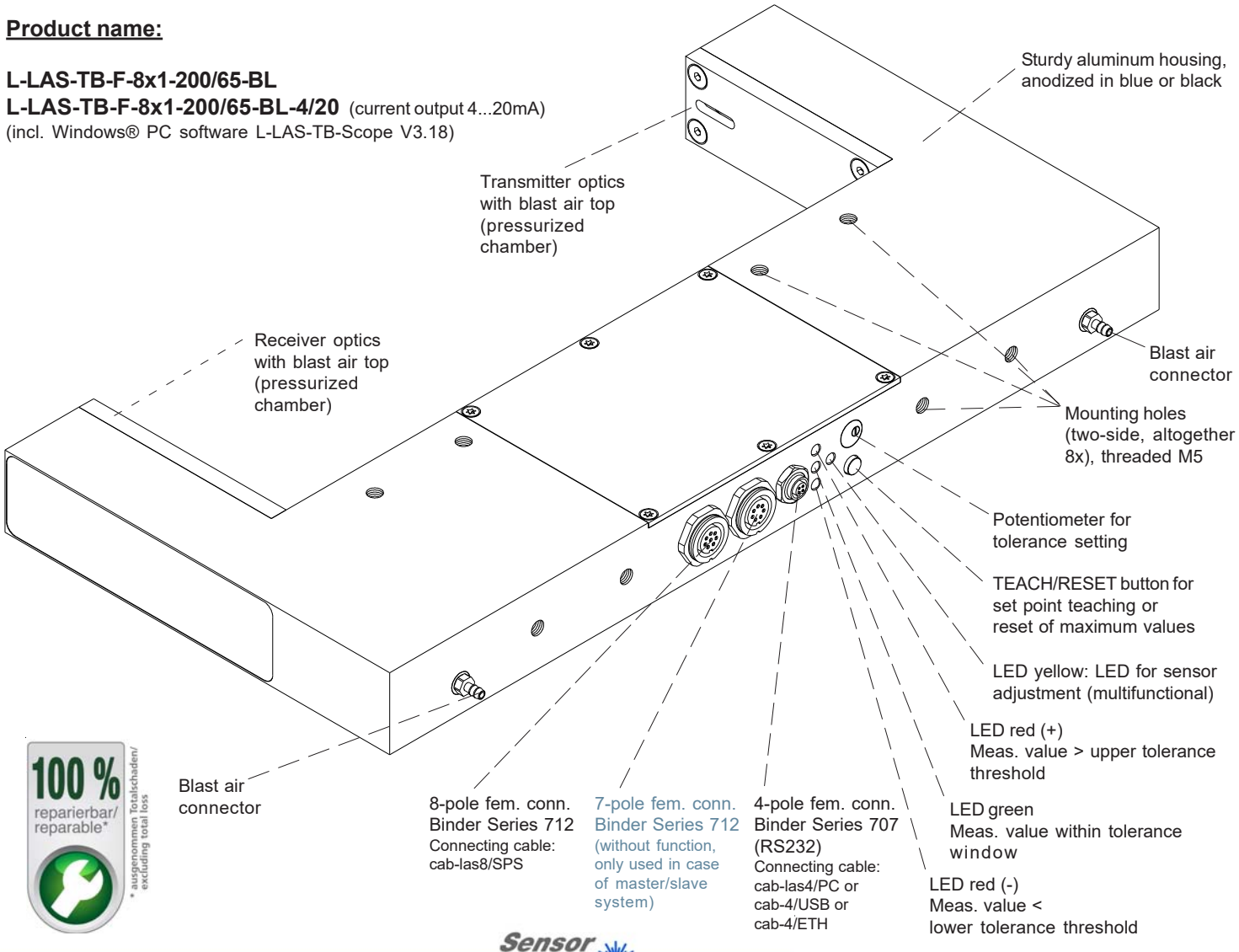

100 % reparierbar/ reparable* * ausgenommen Totalschaden/ excluding total loss

Technical Data

Model	L-LAS-TB-F-8x1-200/65-BL	L-LAS-TB-F-8x1-200/65-BL-4/20
Laser	Semi conductor laser, 670 nm, DC operation, <0.39 mW max. optical power, laser class 1 acc. to DIN EN 60825-1. The use of these laser transmitters therefore requires no additional protective measures.	
Transmitter/receiver distance	200 mm (= fork width)	
Measuring range	typ. 8 mm	
Resolution	typ. 1 µm	
Reproducibility	typ. ± 1 µm	
Linearity	typ. 0.1% FSR (full scale range)	
Optical filter	Interference filter	
Analog output	Voltage output 0 ... +10V	Current output 4 ... 20mA
Digital outputs (OUT0, OUT1, OUT2)	pnp bright-switching (pnp n.c.)/npn dark-switching (npn n.o.) or pnp dark-switching (pnp n.o.)/npn bright-switching (npn n.c.), adjustable under Windows®, 100 mA, short-circuit-proof	
Digital inputs (IN0, IN1)	IN0: External trigger IN1: Teach/Reset (double function) Input voltage +Ub/0V, with protective circuit	
Voltage supply	+24VDC (± 10%)	
Sensitivity setting	adjustable via potentiometer TOL or under Windows® via PC	
Laser power correction	adjustable under Windows® via PC	
Current consumption	typ. 200 mA	
Enclosure rating	Electronics: IP54, optics: IP67	
Operating temperature range	-10°C ... +50°C	
Storage temperature range	-20°C ... +85°C	
Housing material	Aluminium, anodized in blue or black	
Housing dimensions	LxWxH approx. 260 mm x 130 mm x 24 mm (without flange connectors)	
Connector type	8-pole circular female connector type Binder 712 (PLC/Power) 4-pole circular female connector type Binder 707 (PC/RS232)	
Teach button	Teach button an the housing for norm value teaching	
LED display	LED red (+) : Measured value > upper tolerance threshold LED green : Measured value within tolerance window LED red (-) : Measured value < lower tolerance threshold LED yellow: LED for sensor adjustment (multifunctional)	
EMC test acc. to	DIN EN 60947-5-2 CE	
Scan frequency	max. 200 Hz	
Max. switching current	100 mA, short-circuit proof	
Interface	RS232, parameterisable under Windows®	
Connecting cable	Connection to PC: cab-las4/PC or cab-4/USB or cab-4/ETH Connection to PLC: cab-las8/SPS or cab-las8/SPS-w	
Output polarity	Bright-/dark-switching, can be changed under Windows®	
Blast air connectors	at transmitter and receiver side	

Dimensions

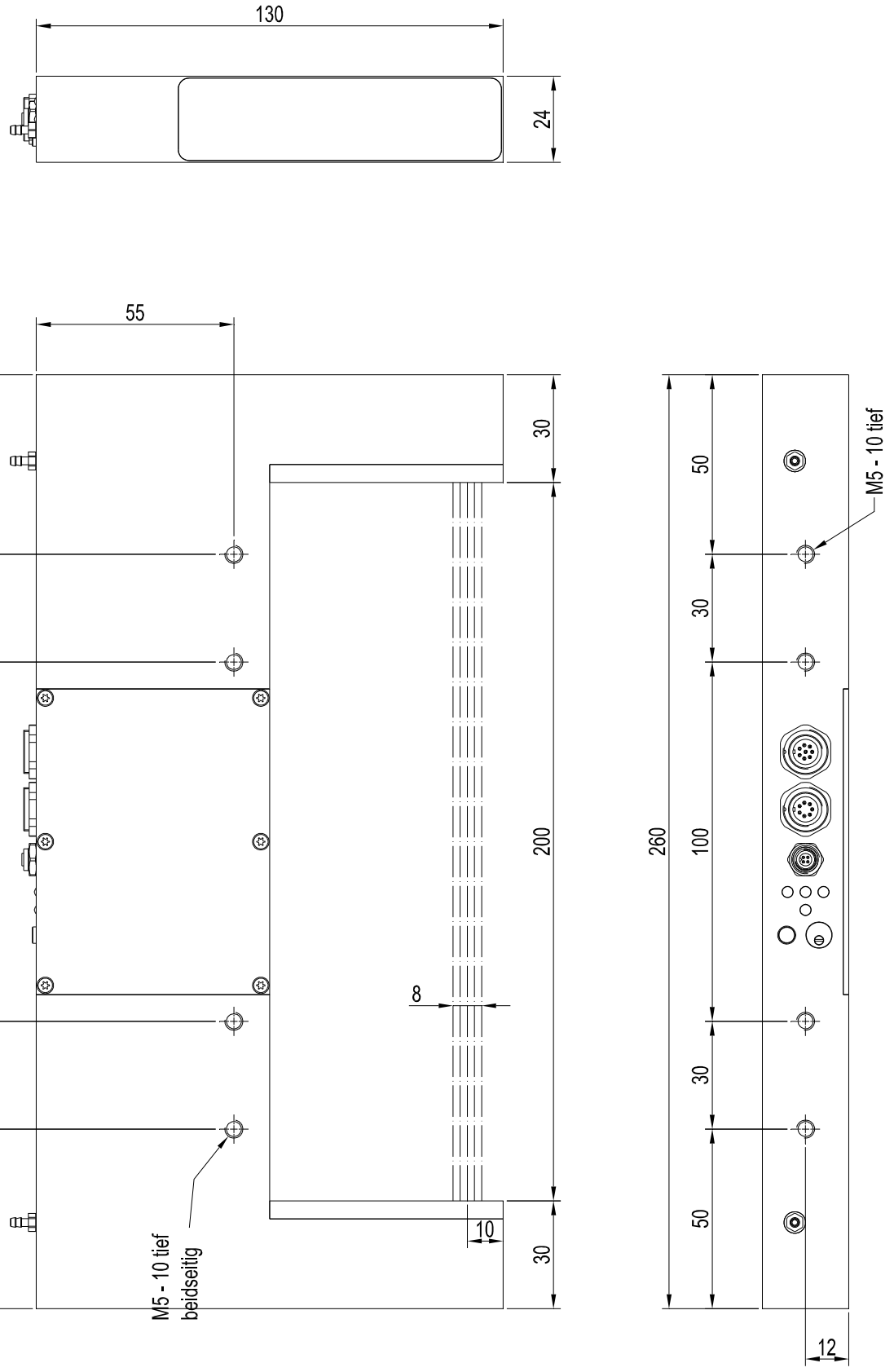

All dimensions in mm

Connector Assignment

Connection to PLC:
8-pole fem. connector Binder Series 712

Pin:	Color:	Assignment:
1	white	GND (0V)
2	brown	+24VDC (± 10%)
3	green	IN0 (EXT TRIGGER)
4	yellow	IN1 (TEACH / RESET)
5	grey	OUT0 (-)
6	pink or black	OUT1 (+)
7	blue	OUT2 (OK)
8	red	ANA (0 ... +10V) **in case of version -4/20: ANA (4 ... 20mA)**

Connecting cable:
cab-las8/SPS-(length) or
cab-las8/SPS-w-(length) (angle type 90°)
(standard length 2m)

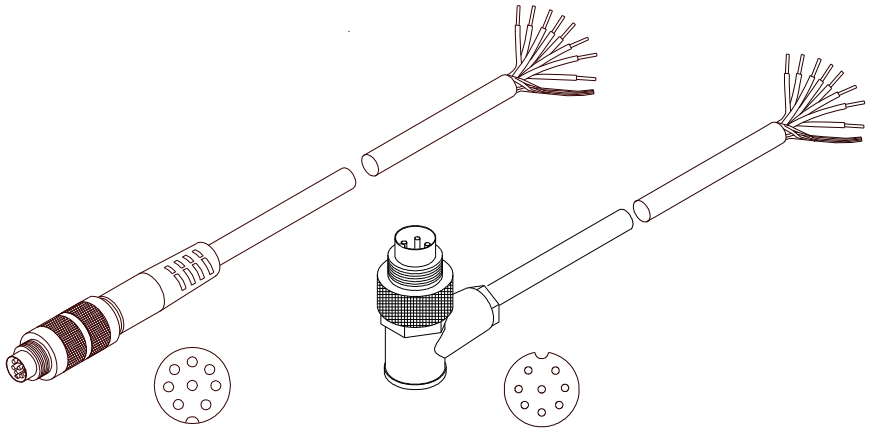

cab-las8/SPS-...
(max. length 25m, outer jacket: PUR)

cab-las8/SPS-w-...
(max. length 25m, outer jacket: PUR)

Connection to PC:
4-pole fem. connector Binder Series 707

Pin:	Assignment:
1	+24VDC (+Ub, OUT)
2	GND (0V)
3	RxD
4	TxD

Connection via RS232 interface at the PC:
Connecting cable:
cab-las4/PC-(length)
cab-las4/PC-w-(length) (angle type 90°)
(standard length 2m)

alternative:
Connection via USB interface at the PC:
USB converter (incl. driver software):
cab-4/USB-(length)
cab-4/USB-w-(length) (angle type 90°)
(standard length 2m)

alternative:
Connection to local network via Ethernet bus:
Ethernet converter (incl. software „SensorFinder“):
cab-4/ETH-500
(standard length 0.5m)

Optional:
External CAT5 cable, e.g.
cab-eth/M12D-RJ45-flx-(length)

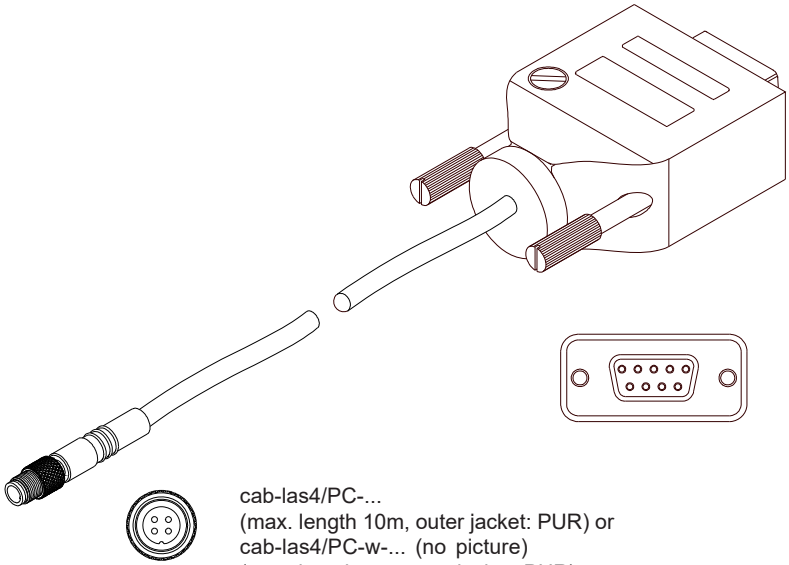

cab-las4/PC-...
(max. length 10m, outer jacket: PUR) or
cab-las4/PC-w-... (no picture)
(max. length 5m, outer jacket: PUR)

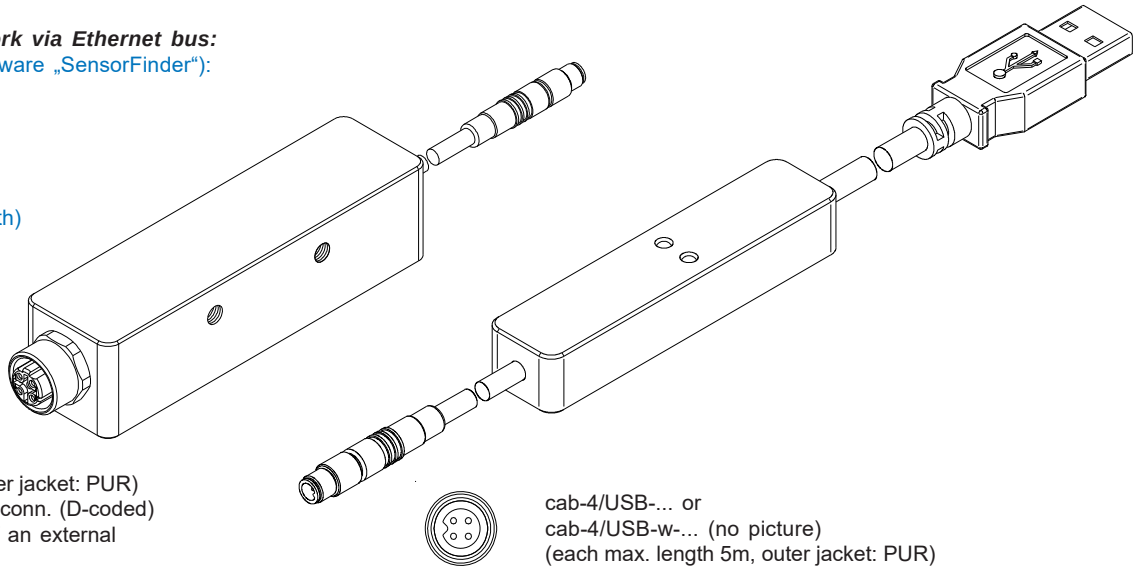

cab-4/ETH-500
(length 0.5m, outer jacket: PUR)
4-pole M12 fem. conn. (D-coded)
for connection of an external
CAT5 cable, e.g.
cab-eth/M12D-RJ45-flx-(length)

cab-4/USB-... or
cab-4/USB-w-... (no picture)
(each max. length 5m, outer jacket: PUR)

LED Display

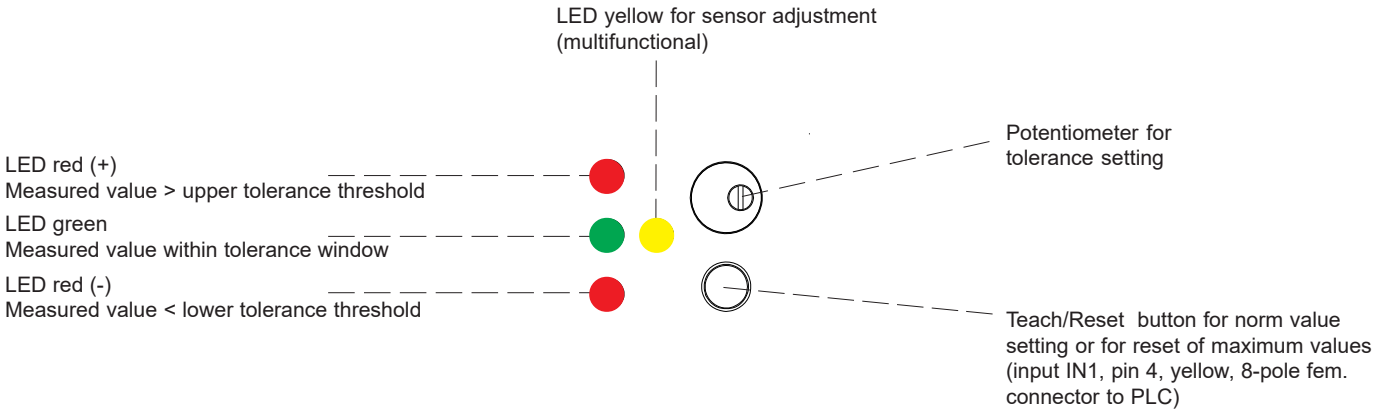

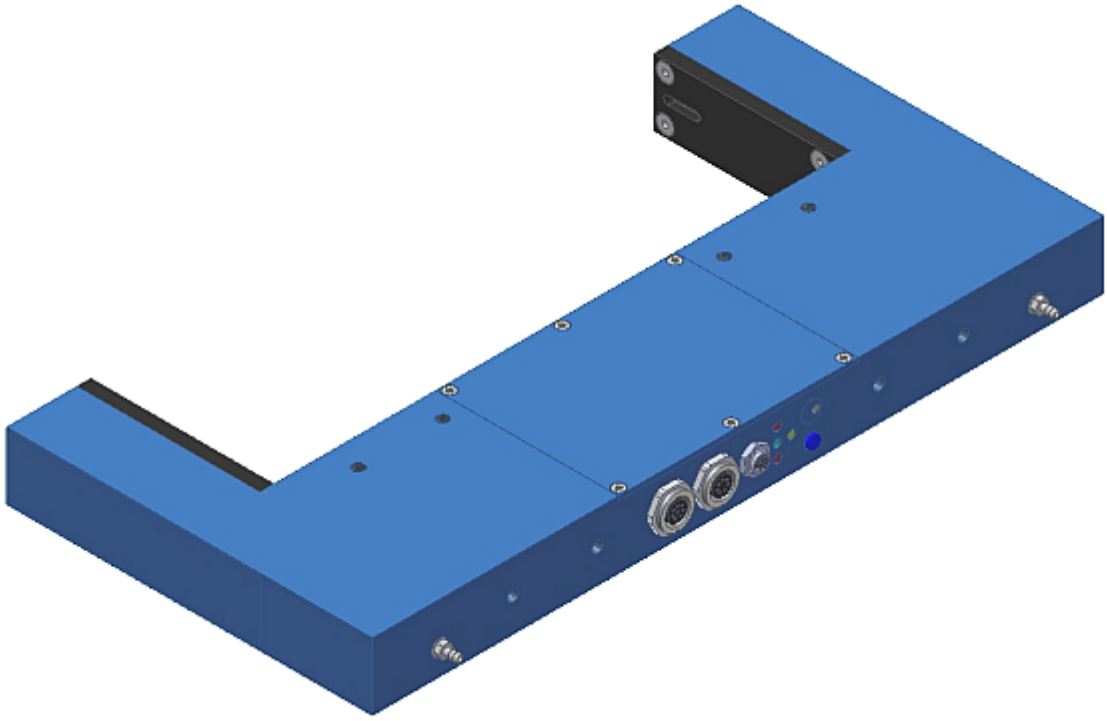

Laser Information

The laser line sensors of L-LAS-TB series comply with laser class 1 according to EN 60825-1. Under reasonably foreseeable conditions a class 1 laser is safe. The reasonably foreseeable conditions are kept during specified normal operation. The use of these laser transmitters therefore requires no additional protective measures.

The laser line sensors of L-LAS-TB series are supplied with an information label „CLASS 1 LASER PRODUCT“.

CLASS 1 LASER PRODUCT

DIN EN 60825-1: 2008-05

Parameterization

Windows® software L-LAS-TB-Scope:

The L-LAS-TB sensor can be easily parameterised with the Windows® user interface.
For this purpose the sensor is connected to the PC with the serial interface cable cab-las4/PC (or with the USB converter cab-4/USB or the Ethernet converter cab-4/ETH). When parameterisation is finished, the PC can be disconnected again.

Windows® user interface:

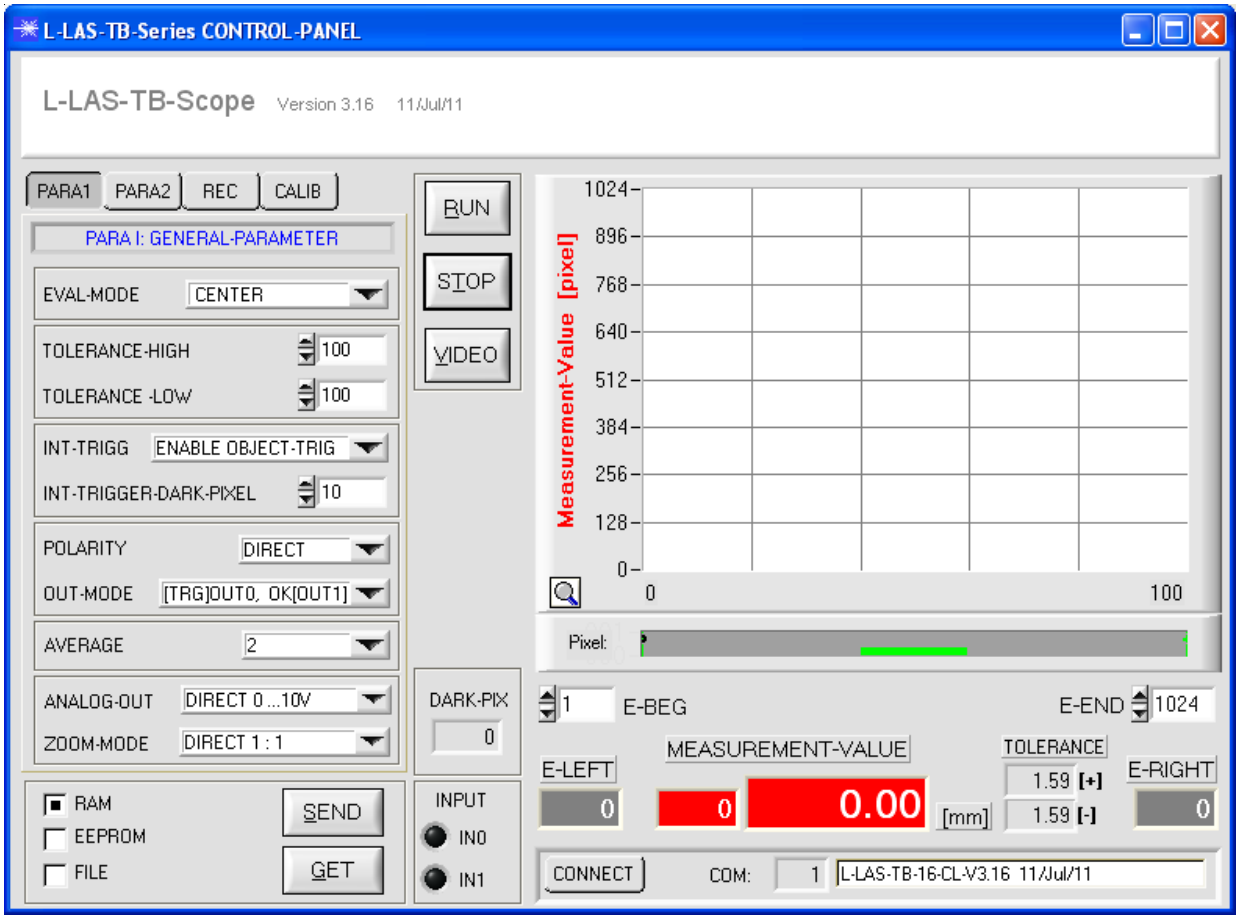

With the help of the L-LAS-TB-Scope software the following settings can be made at the sensor:

- Setting of laser power and type of automatic power correction
- Polarity of digital outputs
- Different evaluation modes
- Start of the teach process by software button
- Setting of tolerance ranges for monitoring the measured value

Furthermore, various numerical and graphical measured quantities can be visualized with the L-LAS-TB-Scope software. For example, the raw data of the CCD line sensor can be displayed graphically and numerically.