L-LAS Series

L-LAS-TB-12

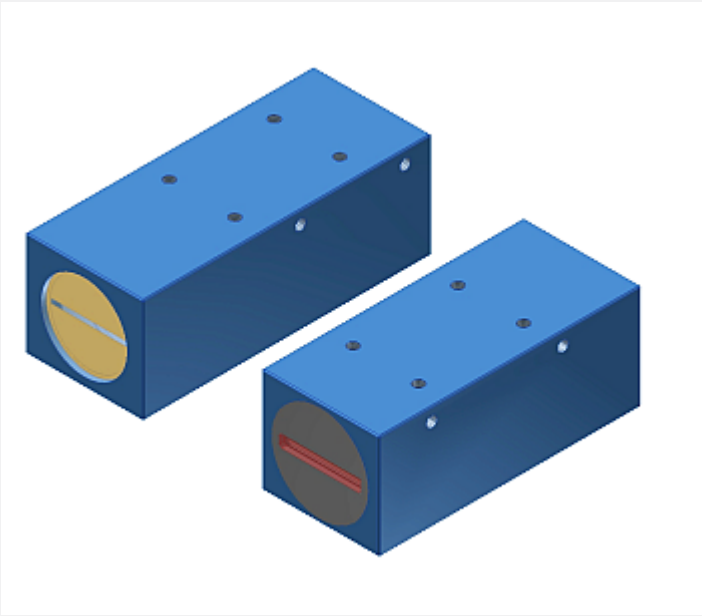

- Line laser <0.39 mW, wave length 670 nm, laser class 1
- Visible laser line, typ. 15 mm x 2 mm
- Measuring range typ. 12.8 mm
- Resolution typ. 7 µm
- Working distance up to 500 mm
- Integrated interference filter
- CCD line detector with 512 pixel (2048 subpixel)
- External teach button and potentiometer for tolerance setting
- RS232 interface (USB or Ethernet converter available)
- 2 digital inputs, 3 digital outputs
- 1 analog output (0 ... +10V or 4 ... 20mA)
- Switching state indication via 4 LEDs (1x grn, 2x red, 1x yel)

Design

Product name:

L-LAS-TB-12-T (Transmitter)
L-LAS-TB-12-R (Receiver)
L-LAS-TB-12-R-4/20 (Receiver 4...20mA)
(incl. Windows® PC software L-LAS-TB-Scope V3.18)

Accessories: (cf. page 9)

ABL-TB-12-T
ABL-TB-12-R
(Blast air tops)

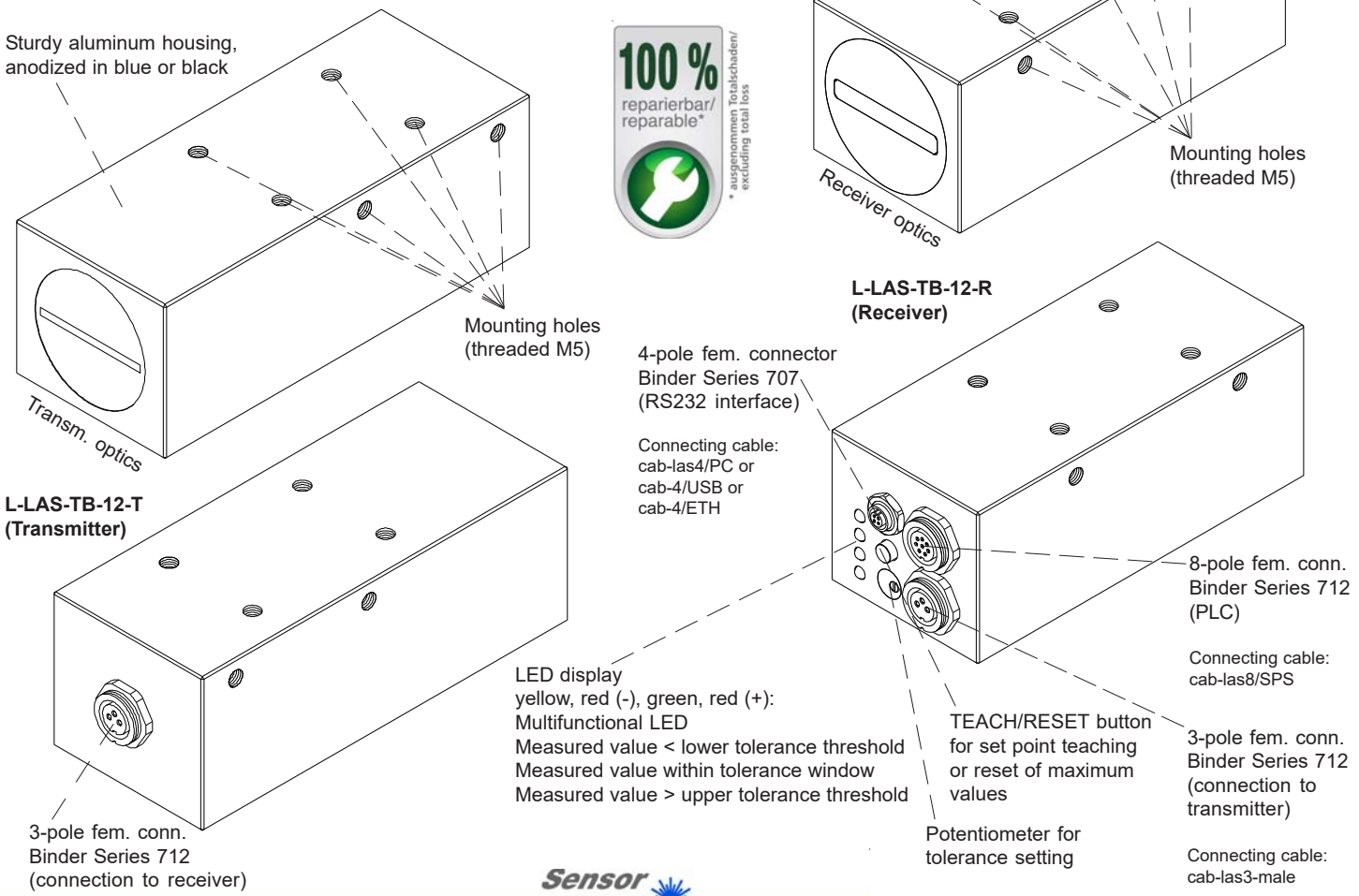

Technical Data

Model	L-LAS-TB-12-T L-LAS-TB-12-R	L-LAS-TB-12-T L-LAS-TB-12-R-4/20
Laser	Semi conductor laser, 670 nm, DC operation, <0.39 mW max. optical power, laser class 1 acc. to DIN EN 60825-1. The use of these laser transmitters therefore requires no additional protective measures.	
Measuring distance	up to 500 mm	
Measuring range	typ. 12.8 mm	
Resolution	typ. 7 µm	
Reproducibility	typ. ± 7 µm	
Linearity	typ. 0,1% FSR (fulll scale range)	
Optical filter	Interference filter	
Analog output (ANA)	Voltage output: 0 ... +10V	Current output: 4 ... 20mA
Digital outputs (OUT0, OUT1, OUT2)	pnp bright-switching (pnp n.c.)/npn dark-switching (npn n.o.) or pnp dark-switching (pnp n.o.)/npn bright-switching (npn n.c.), adjustable under Windows®, 100 mA, short-circuit-proof	
Digital inputs (IN0, IN1)	IN0: External trigger IN1: Teach/Reset (double function) Input voltage +Ub/0V, with protective circuit	
Voltage supply	+24VDC (± 10%)	
Sensitivity setting	under Windows® via PC	
Laser power correction	Dynamic/static mode adjustable under Windows® via PC	
Current consumption	typ. 200 mA	
Enclosure rating	Electronics: IP54, optics: IP67	
Operating temperature range	-10°C ... +50°C	
Storage temperature range	-20°C ... +85°C	
Housing material	Aluminium, anodized in blue or black	
Housing dimensions	Transmitter: LxWxH approx. 110 mm x 40 mm x 45 mm (without connector) Receiver: LxWxH approx. 100 mm x 40 mm x 45 mm (without connectors)	
Type of connectors of receiver	8-pole female connector type Binder Series 712 (PLC/Power) 4-pole M5 female connector Typ Binder Series 707 (PC/RS232) 3-pole female connector Binder Series 712 (connection to the transmitter)	
Type of connector of transmitter	3-pole female connector Binder Series 712 (connection to the receiver)	
TEACH/RESET button	For set point teaching or for reset of maximum values	
LED indication	LED red (+) : Measured value > upper tolerance threshold LED green : Measured value within tolerance window LED red (-) : Measured value < lower tolerance threshold LED yellow : Multifunctional LED	
EMC test acc. to	DIN EN 60947-5-2 CE	
Scan frequency	max. 400 Hz	
Max. switching current	100 mA, short-circuit-proof	
Interface	RS232, parameterisable under Windows®	
Connecting cables	Connection to PC: cab-las4/PC or cab-4/USB or cab-4/ETH Connection to PLC: cab-las8/SPS or cab-las8/SPS-w Connection of transmitter and receiver: cab-las3-male (max. length 15 m)	
Output polarity	Bright-/dark-switching, adjustable under Windows®	

Dimensions

L-LAS-TB-12-T (Transmitter)

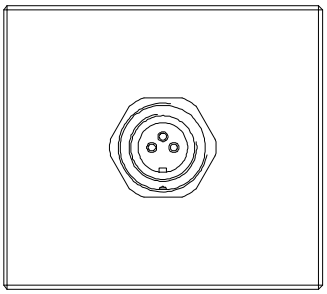

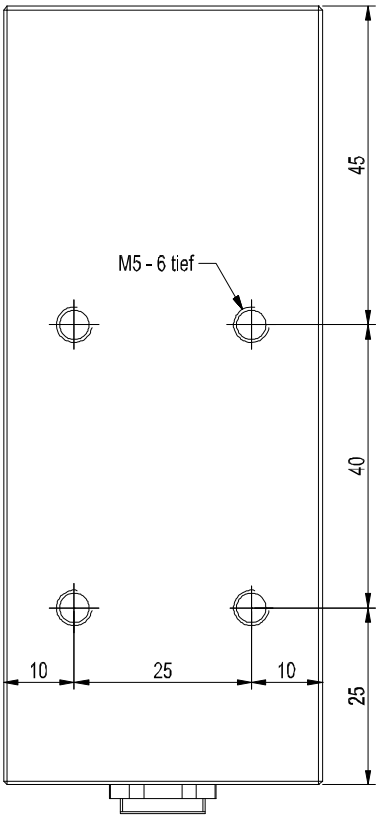

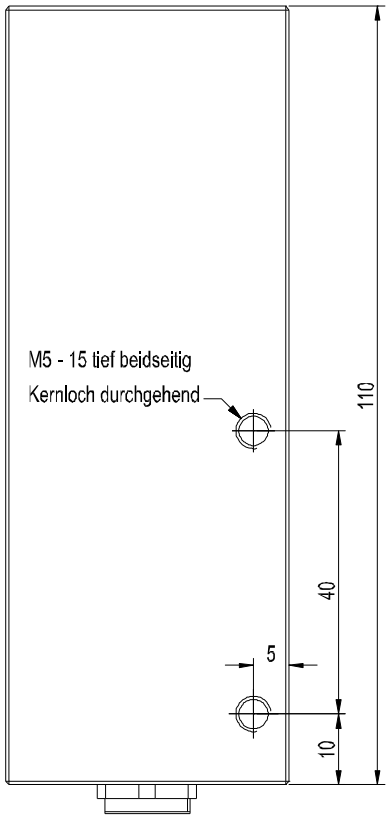

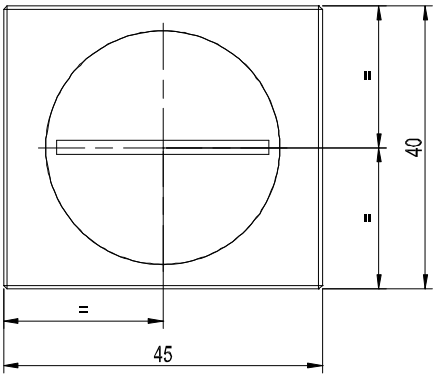

All dimensions in mm

Dimensions

L-LAS-TB-12-R or
L-LAS-TB-12-R-4/20
(Receiver)

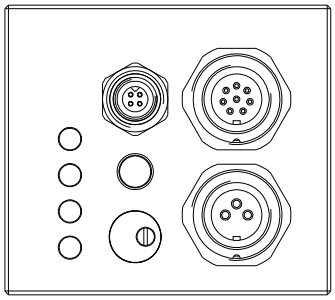

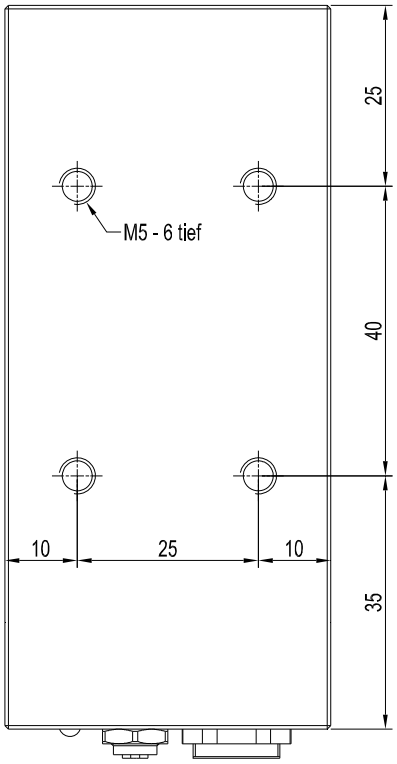

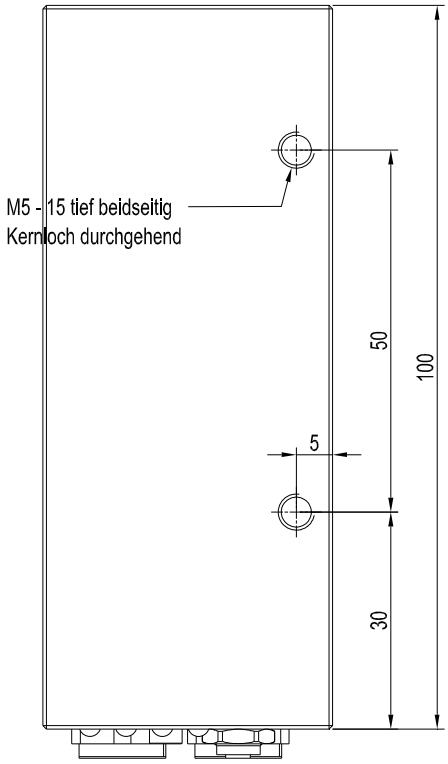

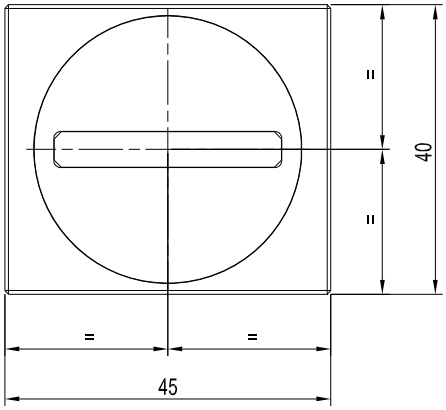

All dimensions in mm

Connector Assignment

Connection to PLC:
8-pole fem. connector Binder Series 712

Pin:	Color:	Assignment:
1	white	GND (0V)
2	brown	+24VDC (± 10%)
3	green	IN0 (EXT TRIGGER)
4	yellow	IN1 (TEACH / RESET)
5	grey	OUT0 (-)
6	pink or black	OUT1 (+)
7	blue	OUT2 (OK)
8	red	ANA (0 ... +10V)
		in case of version -4/20: ANA (4 ... 20mA)

Connecting cable:
cab-las8/SPS-(length) or
cab-las8/SPS-w-(length) (angle type 90°)
(standard length 2m)

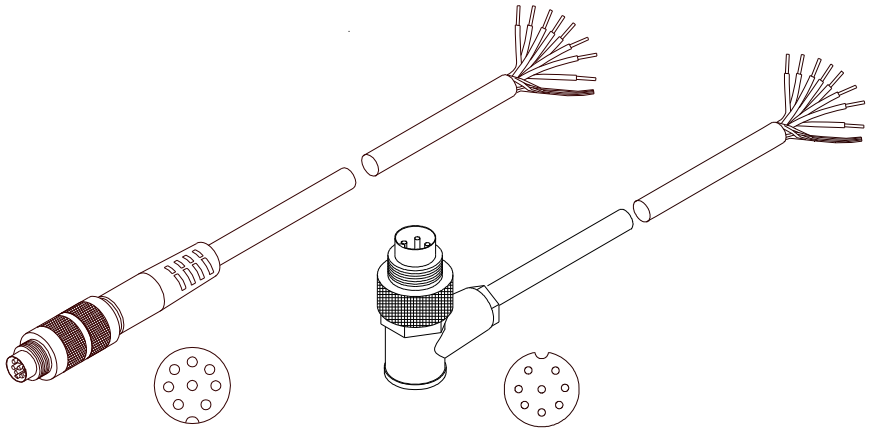

cab-las8/SPS-...
(max. length 25m, outer jacket: PUR)

cab-las8/SPS-w-...
(max. length 25m, outer jacket: PUR)

Connection to PC:
4-pole fem. connector Binder Series 707

Pin:	Assignment:
1	+24VDC (+Ub, OUT)
2	GND (0V)
3	RxD
4	TxD

Connection via RS232 interface at the PC:
Connecting cable:
cab-las4/PC-(length)
cab-las4/PC-w-(length) (angle type 90°)
(standard length 2m)

alternative:
Connection via USB interface at the PC:
USB converter (incl. driver software):
cab-4/USB-(length)
cab-4/USB-w-(length) (angle type 90°)
(standard length 2m)

alternative:
Connection to local network via Ethernet bus:
Ethernet converter (incl. software „SensorFinder“):
cab-4/ETH-500
(standard length 0.5m)

Optional:
External CAT5 cable, e.g.
cab-eth/M12D-RJ45-flx-(length)

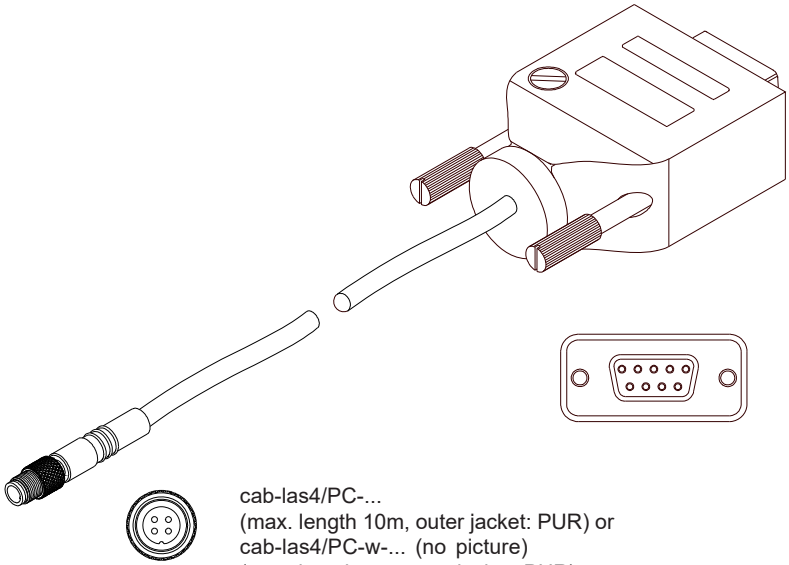

cab-las4/PC-...
(max. length 10m, outer jacket: PUR) or
cab-las4/PC-w-... (no picture)
(max. length 5m, outer jacket: PUR)

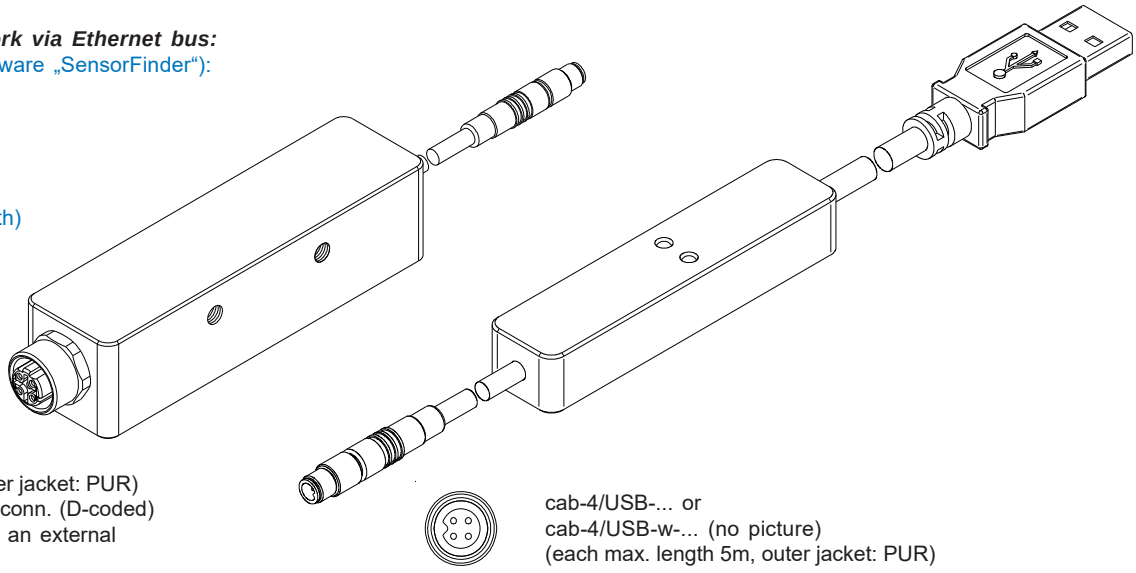

cab-4/ETH-500
(length 0.5m, outer jacket: PUR)
4-pole M12 fem. conn. (D-coded)
for connection of an external
CAT5 cable, e.g.
cab-eth/M12D-RJ45-flx-(length)

cab-4/USB-... or
cab-4/USB-w-... (no picture)
(each max. length 5m, outer jacket: PUR)

Connector Assignment

Connection L-LAS-TB-...-T to
L-LAS-TB-...-R (or L-LAS-TB-...-R-4/20)
3-pol. fem. connector Binder series 712

Pin:	Assignment:
1	+5VDC
2	0V (GND)
3	I-CONTROL (0V ... +5V)

Connecting cable:
cab-las3-male-(length)
cab-las3-male-w-(length) (angle type 90°)
(standard length 2m)

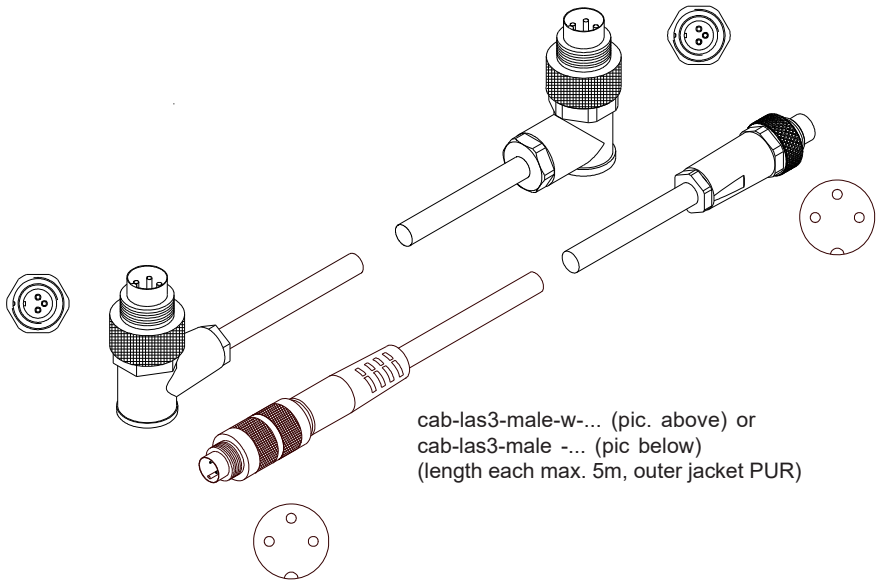

cab-las3-male-w-... (pic. above) or
cab-las3-male -... (pic below)
(length each max. 5m, outer jacket PUR)

LED Display

LED yellow
Sensor adjustment (multifunctional LED)

LED red (-)
Measuring value < lower tolerance threshold

LED green
Measuring value within tolerance window

LED red (+)
Measuring value > upper tolerance threshold

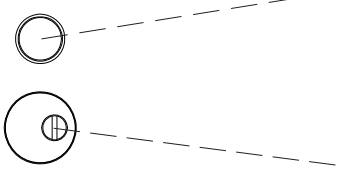

TEACH/RESET button
for set point teaching or reset of maximum values (input IN1, pin 4, yellow, 8-pole PLC female connector)

Potentiometer for tolerance setting

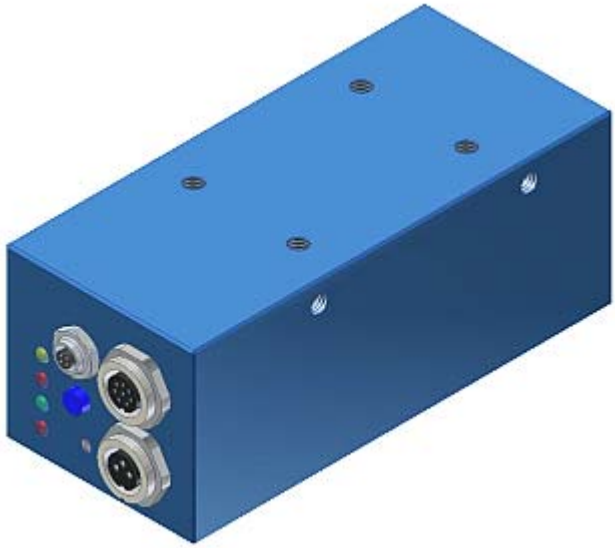

Laser Information

The laser line sensors of L-LAS-TB series comply with laser class 1 according to EN 60825-1. Under reasonably foreseeable conditions a class 1 laser is safe.
The reasonably foreseeable conditions are kept during specified normal operation.
The use of these laser transmitters therefore requires no additional protective measures.

The laser line sensors of L-LAS-TB series are supplied with an information label „CLASS 1 LASER PRODUCT“.

CLASS 1 LASER PRODUCT

DIN EN 60825-1: 2008-05

Parameterization

Windows® software L-LAS-TB-Scope:

The L-LAS-TB sensor can be easily parameterised with the Windows® user interface.
For this purpose the sensor is connected to the PC with the serial interface cable cab-las4/PC (or with the USB converter cab-4/USB or the Ethernet converter cab-4/ETH). When parameterisation is finished, the PC can be disconnected again.

Windows® user interface:

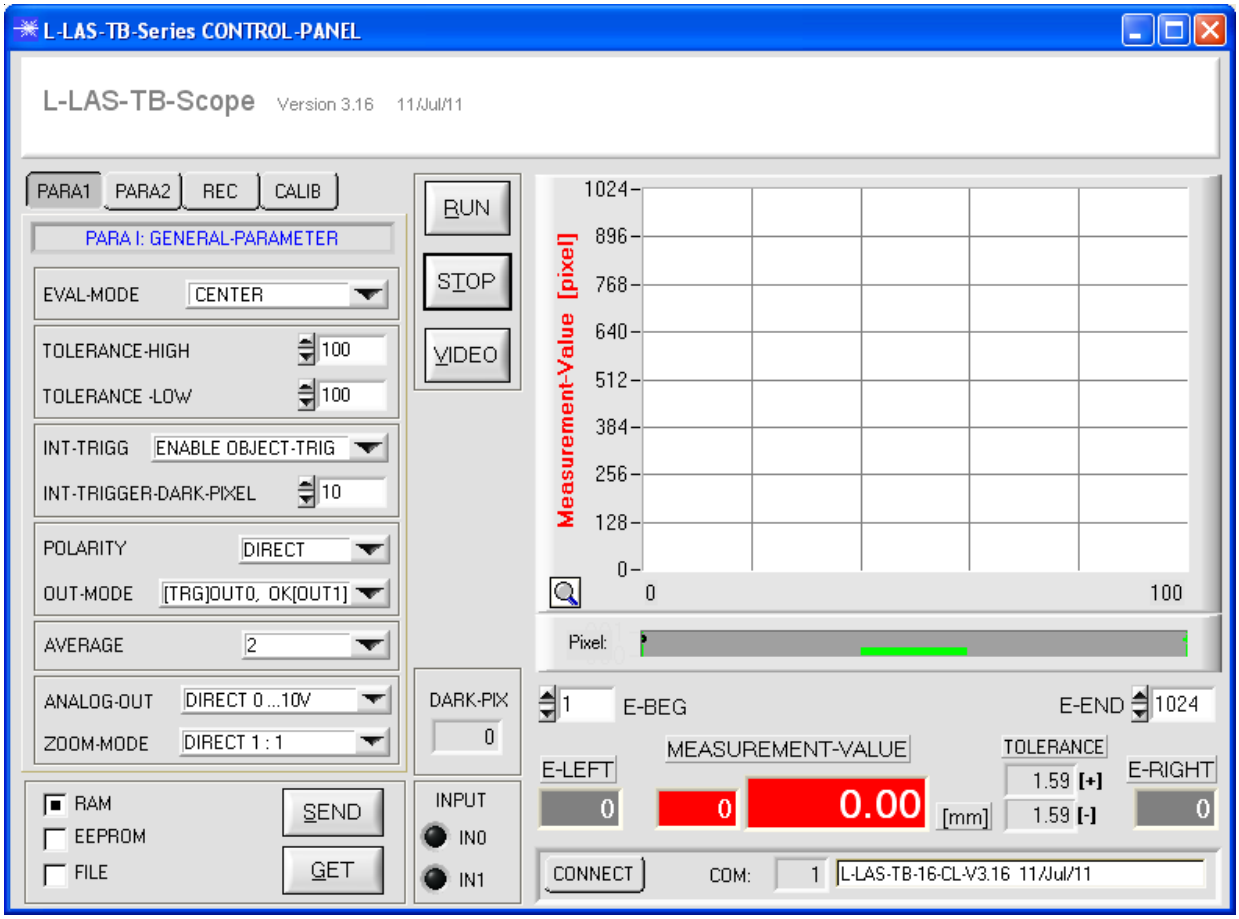

With the help of the L-LAS-TB-Scope software the following settings can be made at the sensor:

- Setting of laser power and type of automatic power correction
- Polarity of digital outputs
- Different evaluation modes
- Start of the teach process by software button
- Setting of tolerance ranges for monitoring the measured value

Furthermore, various numerical and graphical measured quantities can be visualized with the L-LAS-TB-Scope software. For example, the raw data of the CCD line sensor can be displayed graphically and numerically.

Accessories

Blast air tops for L-LAS-TB-12-T and L-LAS-TB-12-R:
(please order separately)

ABL-TB-12-T (for transmitter)
ABL-TB-12-R (for receiver)

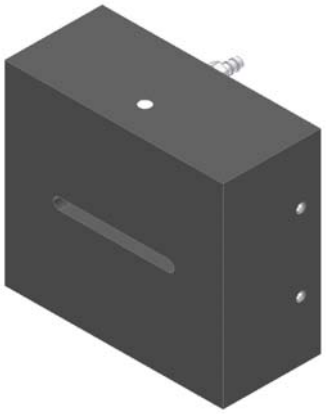

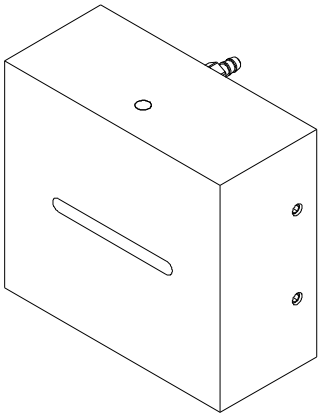

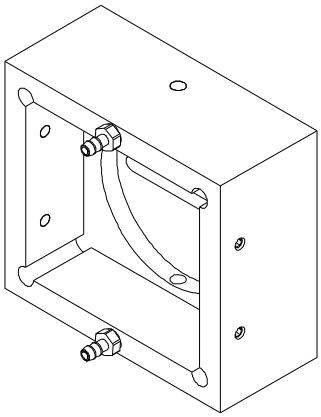

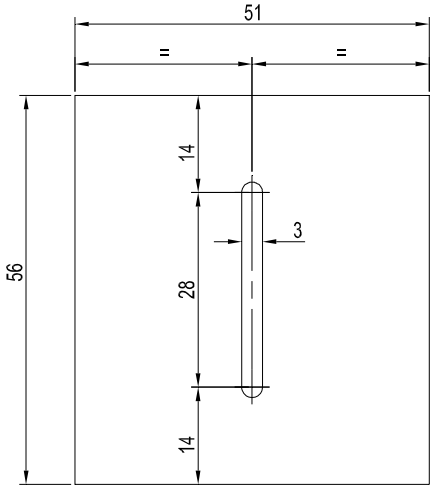

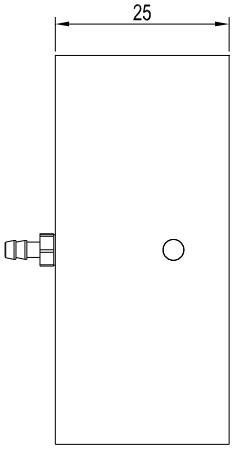

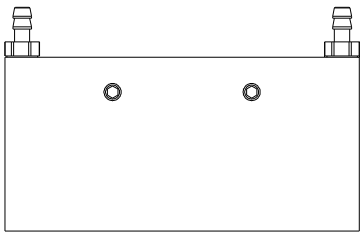

All dimensions in mm