L-LAS Series

L-LAS-TB-8-CON1
L-LAS-TB/90-8x1-T, /-R
L-LAS-TB/90-1x8-T, /-R

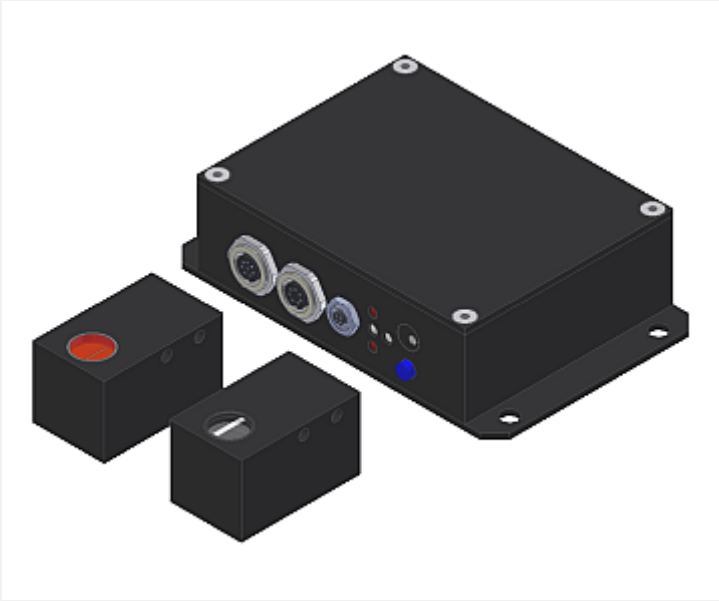

- Line laser <0.39 mW, wave length 670 nm, laser class 1
- Visible laser line, typ. 9.5 mm x 1.5 mm
- Measuring range approx. 8 mm
- Resolution typ. 1 µm
- Transmitter/receiver distance max. 2 m
- Integrated interference filter
- CCD line detector with 1024 pixel, 8192 subpixel (8-fold)
- External teach button and potentiometer for tolerance setting
- RS232 interface (USB or Ethernet converter available)
- 2 digital inputs, 3 digital outputs
- 1 analog output 0 ... +10V (optionally 4 ... 20mA)
- Switching state indication via 4 LEDs (1x grn, 2x red, 1x yel)

Design

Product name:

L-LAS-TB-8-CON1 (electronic control unit, 0 ... +10V)
L-LAS-TB-8-CON1-4/20 (electronic control unit , 4... 20mA)
(incl. Windows® PC software L-LAS-TB-Scope V3.18)

L-LAS-TB/90-(AxB)*-T (transmitter)
L-LAS-TB/90-(AxB)*-R (receiver)

***AxB** (position of the laser line):
8x1 (A=8mm, B=1mm)
1x8 (A=1mm, B=8mm)

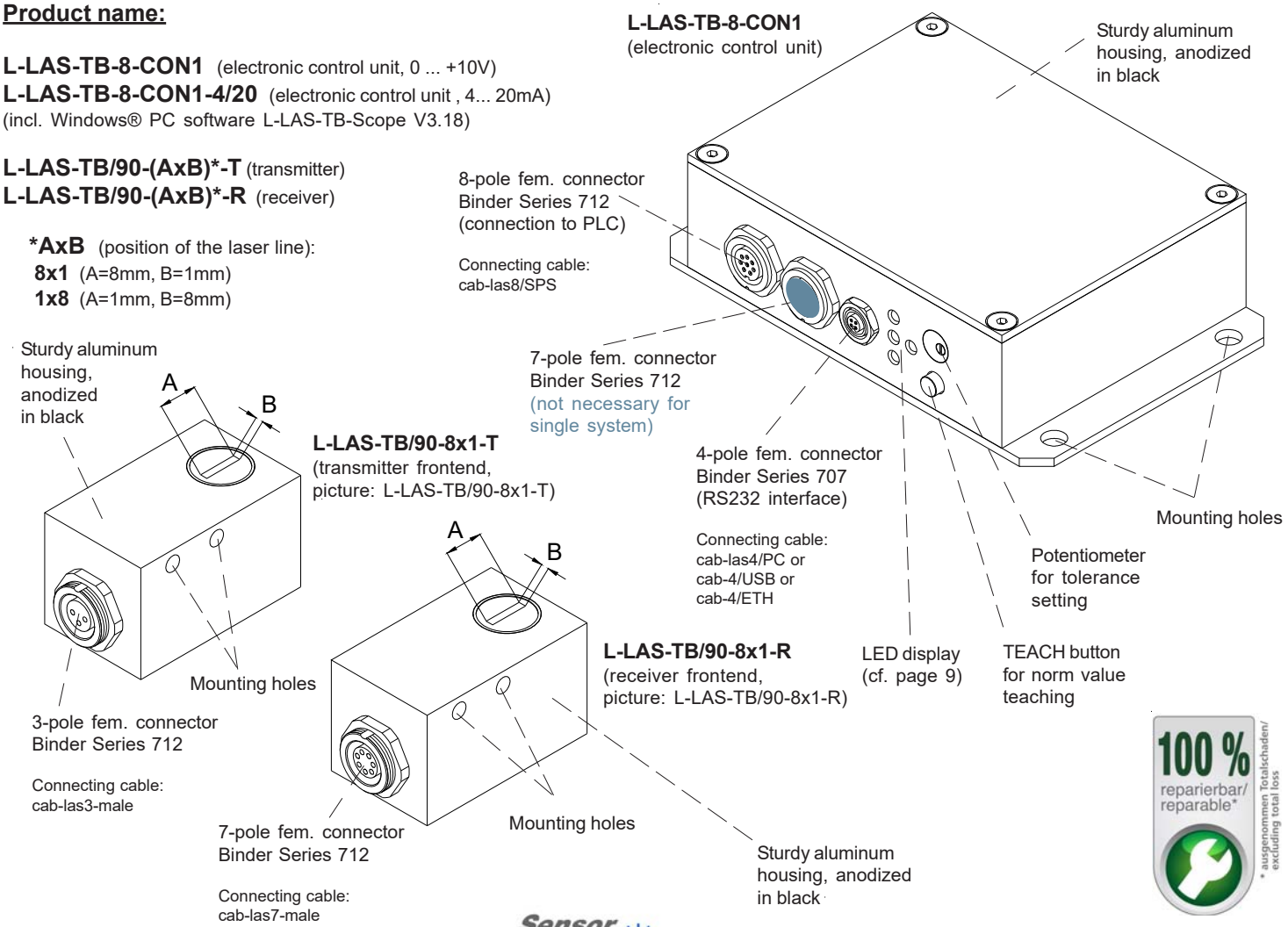

Technical Data

Model	L-LAS-TB-8-CON1 L-LAS-TB/90-(8)-T, L-LAS-TB/90-(8)-R	L-LAS-TB-8-CON1-4/20 L-LAS-TB/90-(8)-T, L-LAS-TB/90-(8)-R
Laser	Semi conductor laser, 670 nm, DC operation, <0.39 mW max. optical power, laser class 1 acc. to DIN EN 60825-1. The use of these laser transmitters therefore requires no additional protective measures.	
Max. distance transmitter/receiver	2 m	
Measuring range	approx. 8 mm	
Resolution	typ. 1 µm	
Reproducibility	typ. ± 1 µm	
Linearity	typ. 0,05% FSR (full scale range)	
Optical filter	Interference filter	
Analog output (ANA)	Voltage output 0 ... +10V	Current output 4 ... 20mA
Digital outputs (OUT0, OUT1, OUT2)	pnp bright-switching (pnp n.c.)/npn dark-switching (npn n.o.) or pnp dark-switching (pnp n.o.)/npn bright-switching (npn n.c.), adjustable under Windows®, 100 mA, short-circuit-proof	
Digital inputs (IN0, IN1)	IN0: External trigger, IN1: Teach/Reset (double function), Input voltage +Ub/0V, with protective circuit	
Voltage supply	+24VDC (± 10%)	
Sensitivity setting	Adjustable by means of potentiometer TOL or under Windows® via PC	
Laser power correction	Dynamic/static mode adjustable under Windows® via PC	
Current consumption	typ. 200 mA	
Enclosure rating	Electronics: IP54, optics: IP67	
Operating temperature range	-10°C ... +50°C	
Storage temperature range	-20°C ... +85°C	
Housing material	Aluminum, anodized in black	
Housing dimensions (without connectors)	Control unit L-LAS-TB-8-CON1: LxWxH approx. 110 mm x 70 mm x 28 mm Transmitter and receiver frontend L-LAS-TB/90-(8)-T: Leach xWxH approx. 40 mm x 24 mm x 24 mm	
Type of connectors control unit L-LAS-TB-8-CON1	8-pole female connector type Binder 712 (PLC/Power), 4-pole female connector type Binder 707 (PC/RS232) 7-pole female connector type Binder 712 (not used with single system)	
Type of connector transmitter	Transmitter frontend L-LAS-TB/90-8x1-T or L-LAS-TB/90-1x8-T: 3-pole female connector Binder 712	
Type of connector receiver	Receiver frontend L-LAS-TB/90-8x1-R or L-LAS-TB/90-1x8-R: 7-pole female connector Binder 712	
Teach button	Teach button at the housing for set point value teaching	
LED display	LED red (+) : Measured value > upper tolerance threshold LED green : Measured value within tolerance window LED red (-) : Measured value < lower tolerance threshold LED yellow: For sensor adjustment (multifunctional LED)	
EMC test acc. to	DIN EN 60947-5-2 CE	
Scan frequency	max. 200 Hz	
Max. switching current	100 mA, short-circuit-proof	
Interface	RS232, parameterisable under Windows®	
Connecting cables	Connection L-LAS-TB-8-CON1 to PC: cab-las4/PC or cab-4/USB or cab-4/ETH Connection L-LAS-TB-8-CON1 to PLC: cab-las8/SPS or cab-las8/SPS-w Connection L-LAS-TB/90-(8)-T to L-LAS-TB-8-CON1: cab-las3-male Connection L-LAS-TB/90-(8)-R to L-LAS-TB-8-CON1: cab-las7-male	
Output polarity	Bright-/dark-switching, adjustable under Windows®	

Dimensions

L-LAS-TB-8-CON1
(electronic control unit)

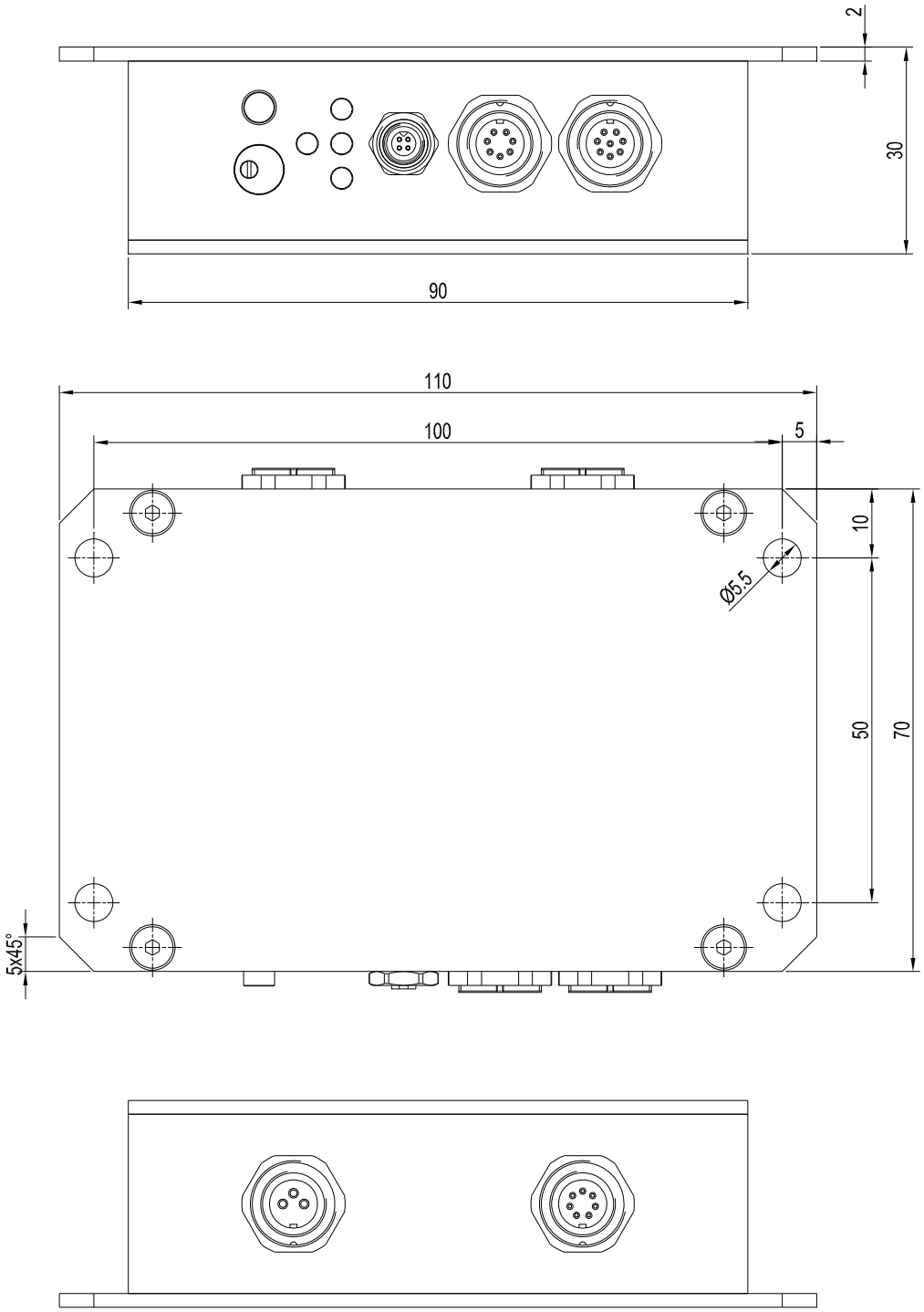

All dimensions in mm

Dimensions

L-LAS-TB/90-8x1-R (picture)
or L-LAS-TB/90-1x8-R
(receiver)

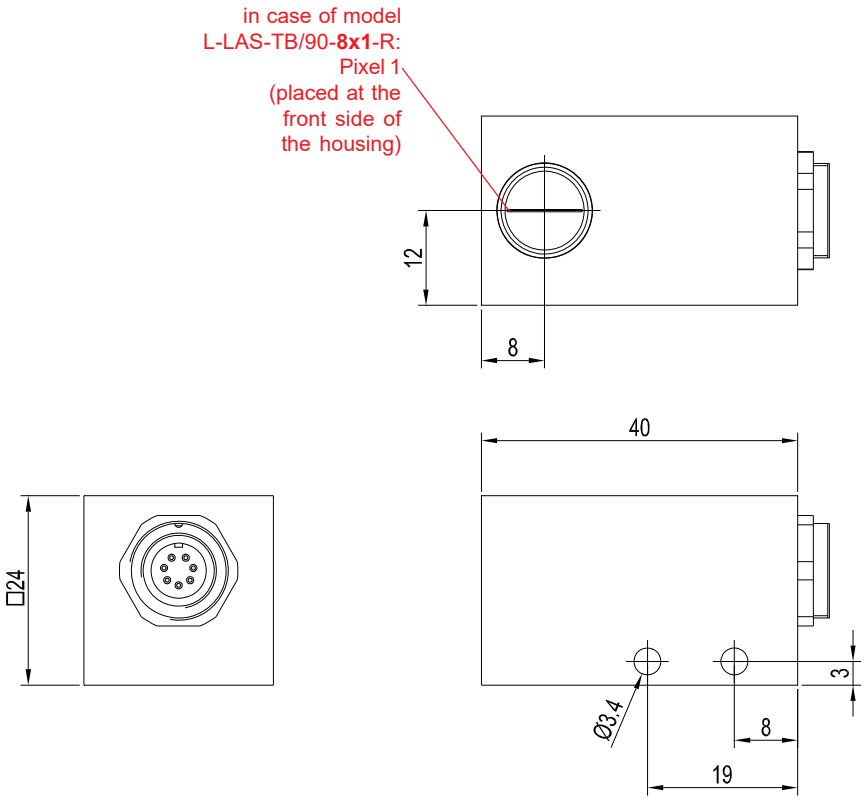

L-LAS-TB/90-8x1-T (picture)
or L-LAS-TB/90-1x8-T
(transmitter)

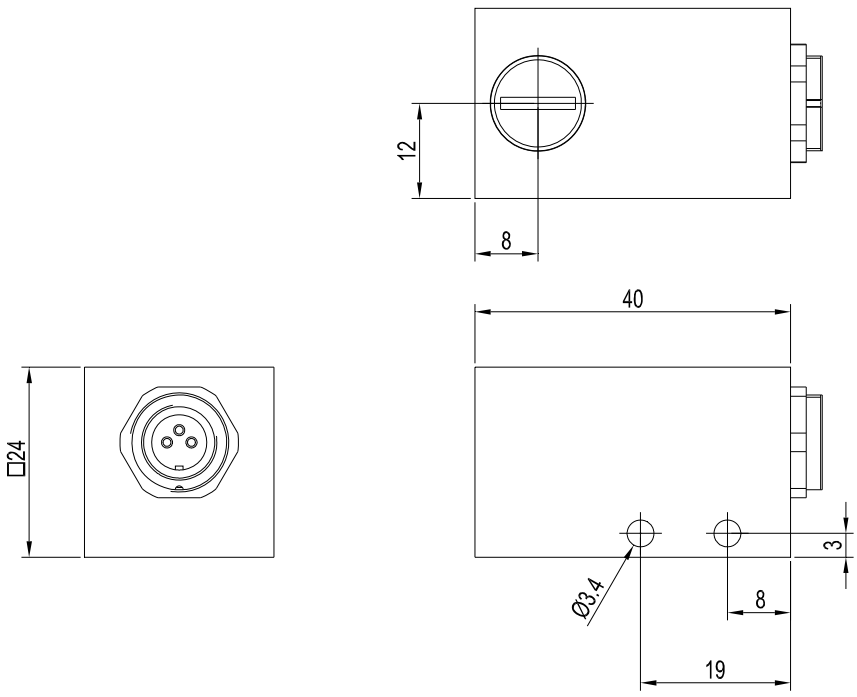

All dimensions in mm

Connector Assignment

Connection L-LAS-TB-8-CON1 to PLC:
8-pole fem. connector Binder Series 712

Pin:	(Color of wire):	Assignment:
1	white	GND (0V)
2	brown	+24VDC (+Ub)
3	green	IN0 (EXT TRIGGER)
4	yellow	IN1 (TEACH / RESET)
5	grey	OUT0 (-)
6	pink or black	OUT1 (+)
7	blue	OUT2 (OK)
8	red	ANA (0 ... +10V) **in case of version -4/20:** **ANA (4 ... 20mA)**

Connecting cable:
cab-las8/SPS-(length) or
cab-las8/SPS-w-(length) (angle type 90°)
(standard length 2m)

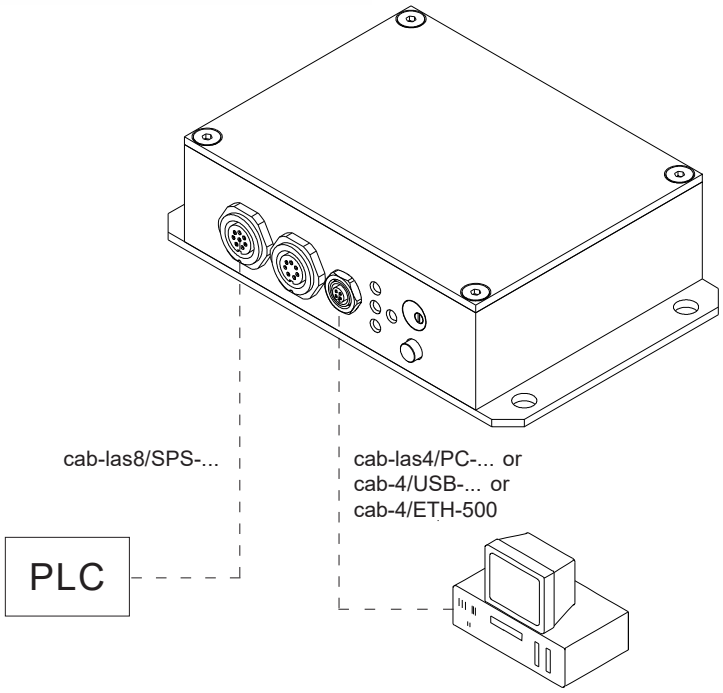

Connection to PC:
4-pole fem. connector Binder Series 707

Pin:	Assignment:
1	+24VDC (+Ub, OUT)
2	GND (0V)
3	RxD
4	TxD

Connection via RS232 interface at the PC:
Connecting cable:
cab-las4/PC-(length)
cab-las4/PC-w-(length) (angle type 90°)
(standard length 2m)

alternative:
Connection via USB interface at the PC:
USB converter
(incl. driver software):
cab-4/USB-(length)
cab-4/USB-w-(length) (angle type 90°)
(standard length 2m)

alternative:
Connection to local network via Ethernet bus:
Ethernet converter
(incl. software „SensorFinder“):
cab-4/ETH-500
(standard length 0.5m)

Optional:
External CAT5 cable, e.g.
cab-eth/M12D-RJ45-flx-(length)

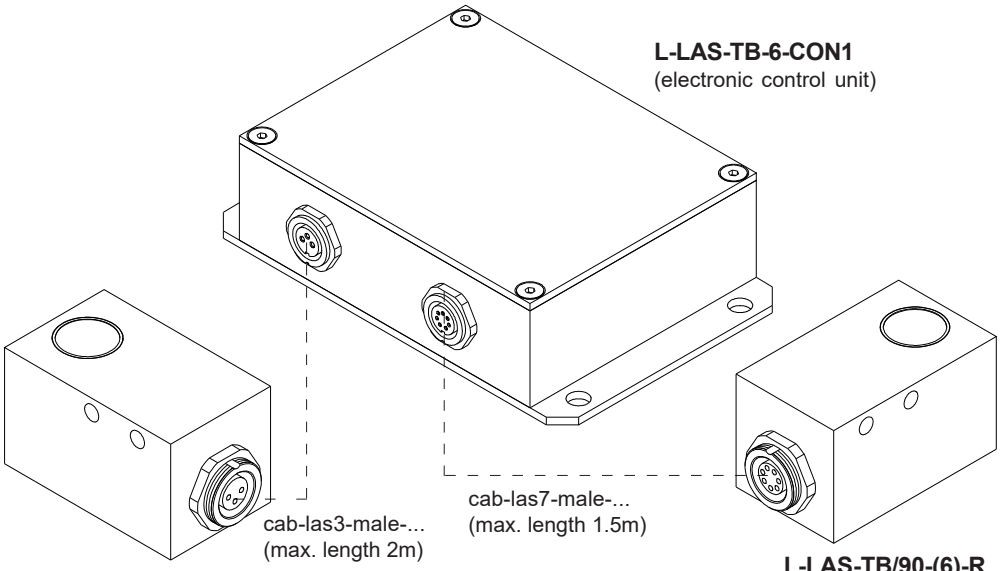

Connection transmitter L-LAS-TB/90-(8)-T to L-LAS-TB-8-CON1:
2x 3-pole fem. connectors Binder Series 712

Pin:	Assignment:
1	+5VDC
2	GND (0V)
3	I-CONTROL (0V ... +5V)

Connecting cable:
cab-las3-male-(length)
cab-las3-male-w-(length) (angle type 90°)
(standard length 2m)

Connection receiver L-LAS-TB/90-(8)-R to L-LAS-TB-8-CON1:
2x 7-pole fem. connectors Binder Series 712

Pin:	Assignment:
1	GND (0V)
2	+6.9VDC
3	START
4	CLOCK
5	GAIN
6	GND (0V)
7	VIDEO

Connecting cable:
cab-las7-male-(length)
cab-las7-male-w-(length) (angle type 90°)
(standard length 1m, max. length 1.5m)

Connecting Cables

Connection L-LAS-TB-8-CON1 to PLC:
cab-las8/SPS oder
cab-las8/SPS-w (angle type 90°)

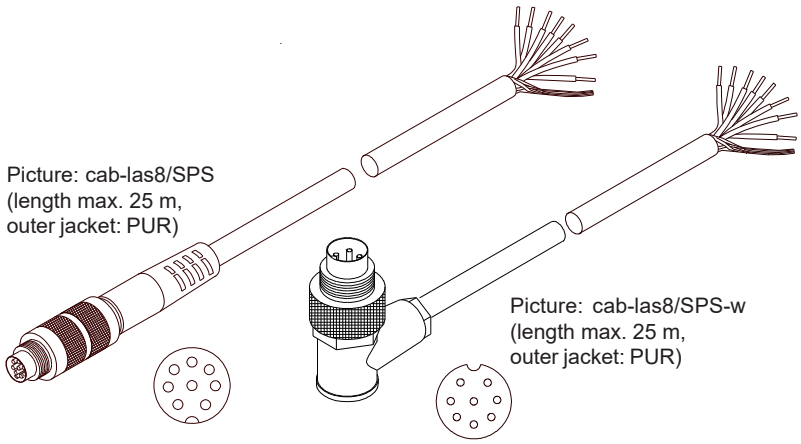

Picture: cab-las8/SPS
(length max. 25 m,
outer jacket: PUR)

Picture: cab-las8/SPS-w
(length max. 25 m,
outer jacket: PUR)

Connection L-LAS-TB-8-CON1 to PC:
cab-las4/PC oder
cab-las4/PC-w (angle type 90°) or
cab-4/USB or
cab-4/USB-w (angle type 90°) or
cab-4/ETH-500

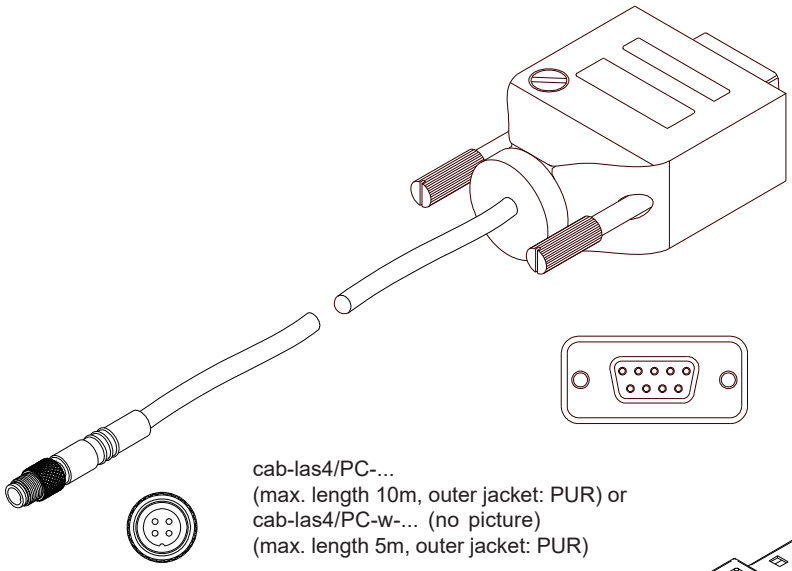

cab-las4/PC-...
(max. length 10m, outer jacket: PUR) or
cab-las4/PC-w-... (no picture)
(max. length 5m, outer jacket: PUR)

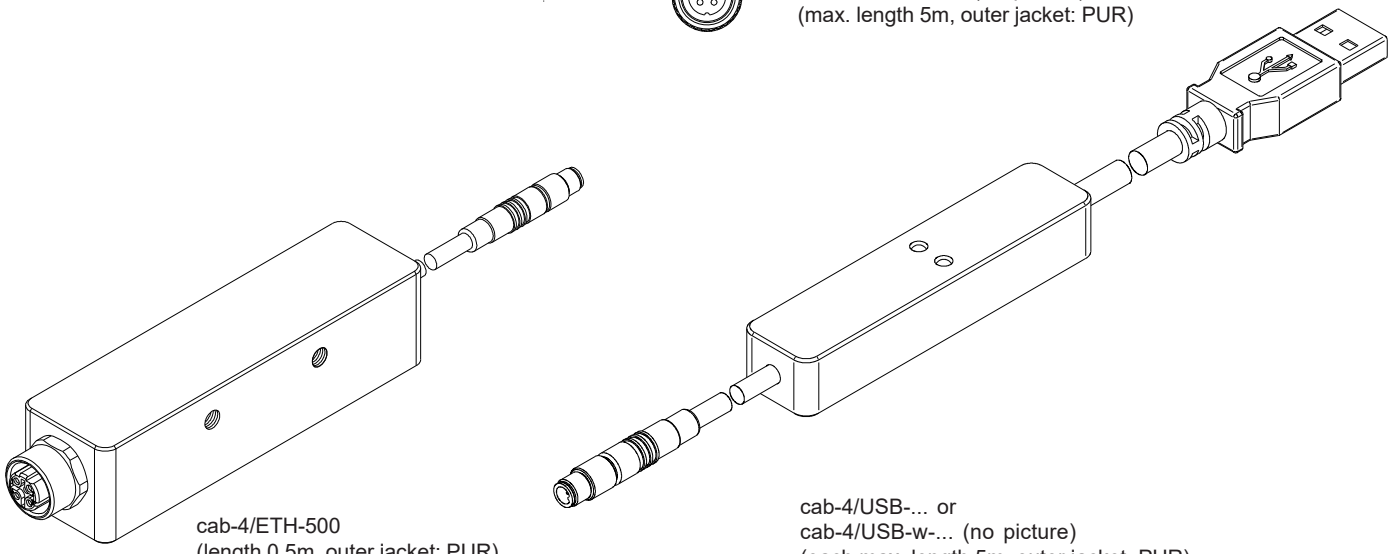

cab-4/ETH-500
(length 0.5m, outer jacket: PUR)
4-pole M12 fem. conn. (D-coded)
for connection of an external
CAT5 cable, e.g.
cab-eth/M12D-RJ45-flx-(length)

cab-4/USB-... or
cab-4/USB-w-... (no picture)
(each max. length 5m, outer jacket: PUR)

Connecting Cables

Connection L-LAS-TB/90-(8)-T to L-LAS-TB-8-CON1:
cab-las3-male or
cab-las3-male-w (angle type 90°)

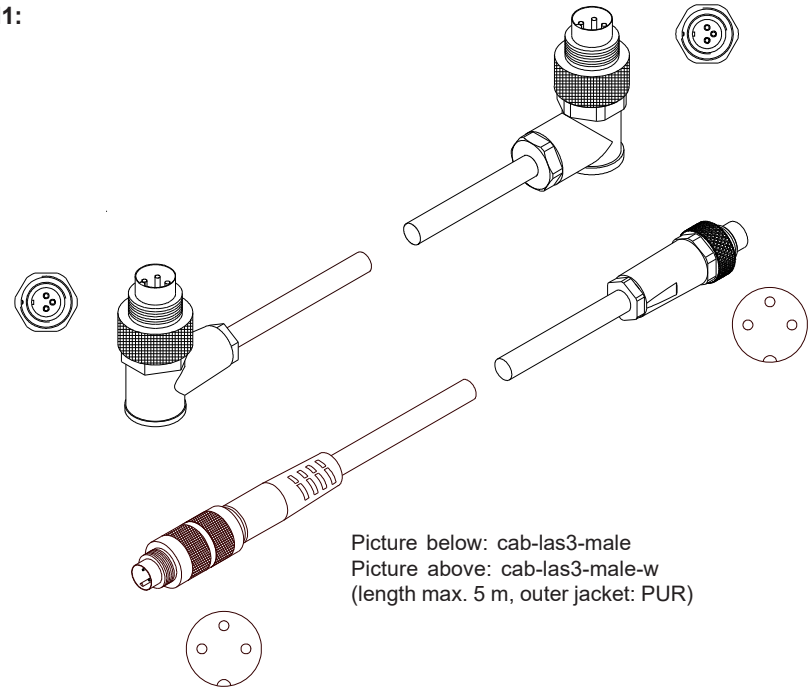

Picture below: cab-las3-male
Picture above: cab-las3-male-w
(length max. 5 m, outer jacket: PUR)

Connection L-LAS-TB/90-(8)-R to L-LAS-TB-8-CON1:
cab-las7-male or
cab-las7-male-w (angle type 90°)

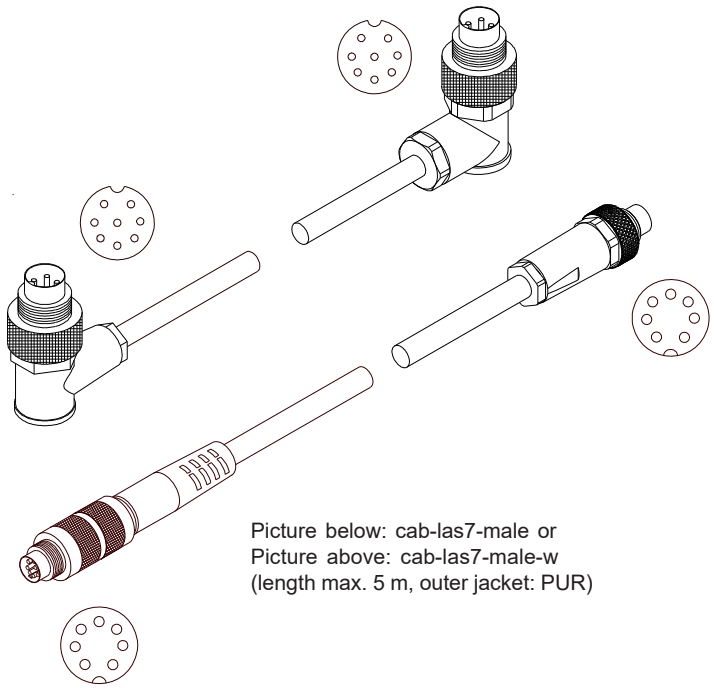

Picture below: cab-las7-male or
Picture above: cab-las7-male-w
(length max. 5 m, outer jacket: PUR)

LED Display

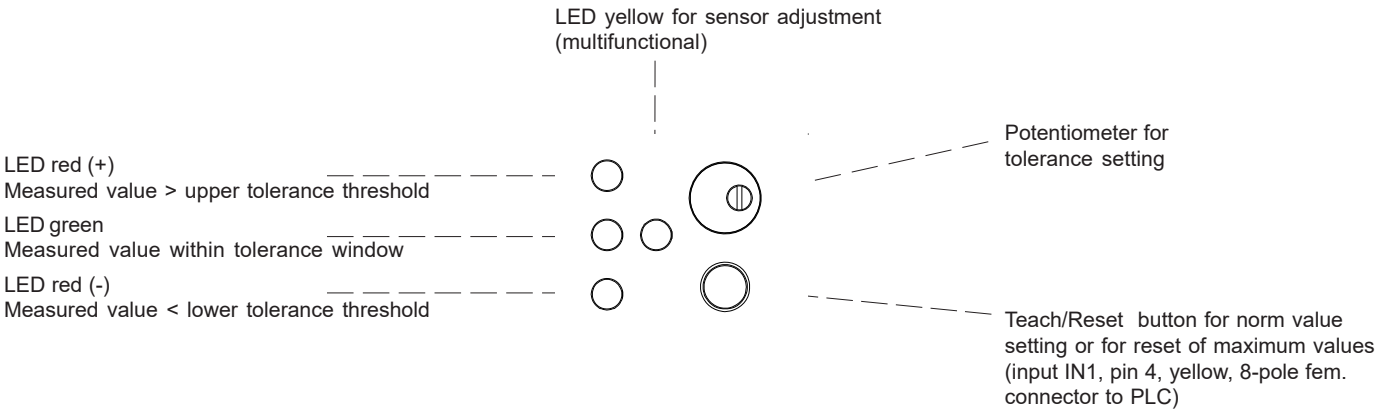



Laser Information

The laser line sensors of L-LAS-TB series comply with laser class 1 according to EN 60825-1. Under reasonably foreseeable conditions a class 1 laser is safe. The reasonably foreseeable conditions are kept during specified normal operation. The use of these laser transmitters therefore requires no additional protective measures.

The laser line sensors of L-LAS-TB series are supplied with an information label „CLASS 1 Laser Product“.



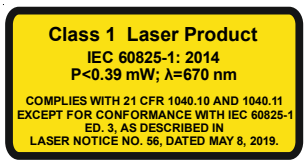

Parameterization

Windows® software L-LAS-TB-Scope:

The L-LAS-TB sensor can be easily parameterised with the Windows® user interface.
For this purpose the sensor is connected to the PC with the serial interface cable cab-las4/PC (or with the USB converter cab-4/USB or the Ethernet converter cab-4/ETH). When parameterisation is finished, the PC can be disconnected again.

Windows® user interface:

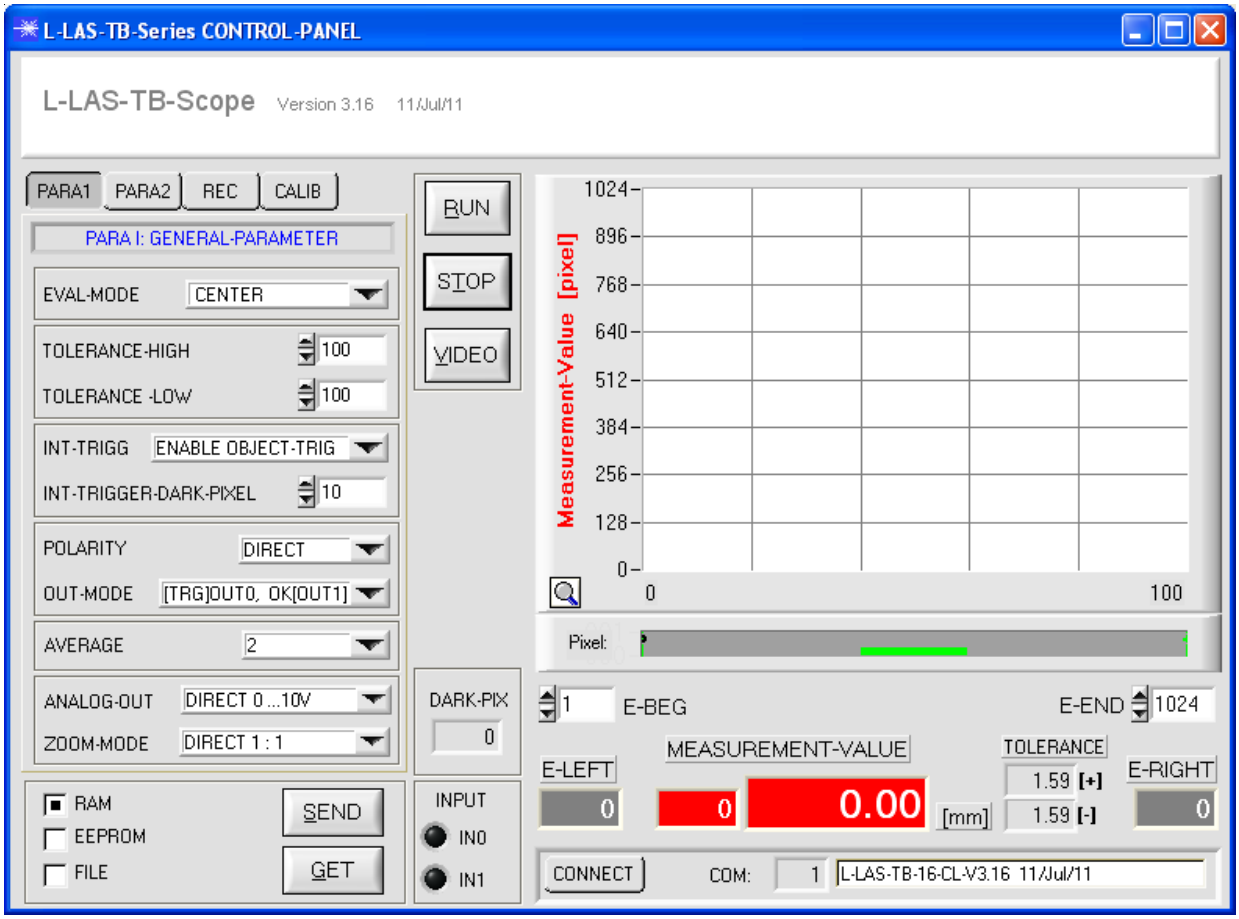

With the help of the L-LAS-TB-Scope software the following settings can be made at the sensor:

- Setting of laser power and type of automatic power correction
- Polarity of digital outputs
- Different evaluation modes
- Start of the teach process by software button
- Setting of tolerance ranges for monitoring the measured value

Furthermore, various numerical and graphical measured quantities can be visualized with the L-LAS-TB-Scope software. For example, the raw data of the CCD line sensor can be displayed graphically and numerically.

Application Examples

Monitoring the cutting edge of foils

The task is to check the cutting edge of foils during the cutting process, with an accuracy lying in the µm range.

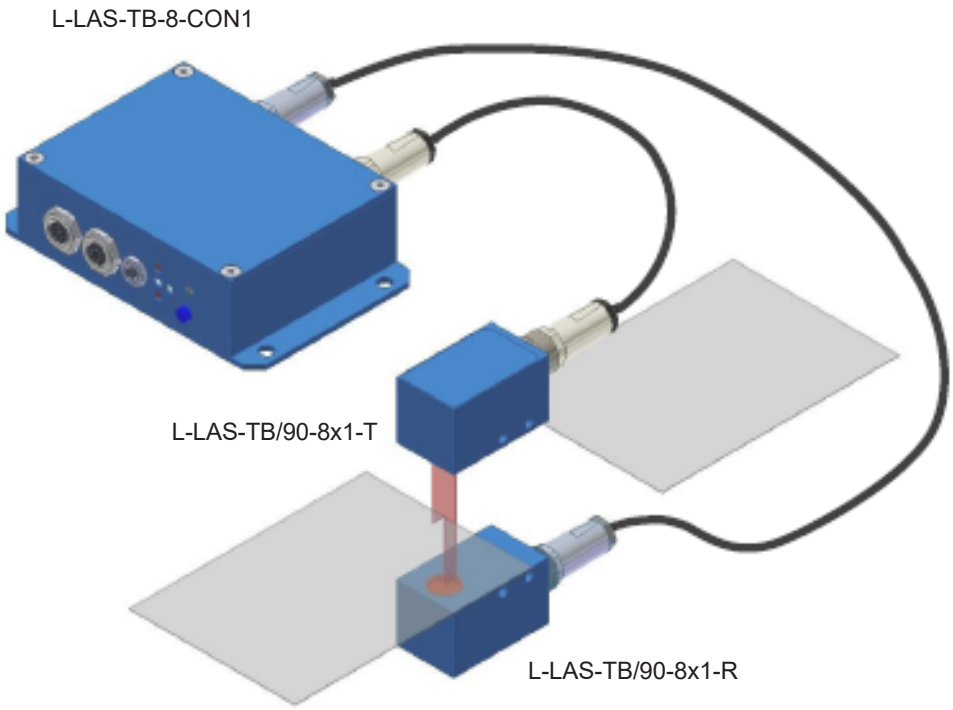

Position checking of plastic foils directly before the welding process

The position of the fed foil should be checked directly before two plastic foils are welded together.

