L-LAS Series

L-LAS-TB-6-CON1-2x
L-LAS-TB/90-(6)-T, /-R

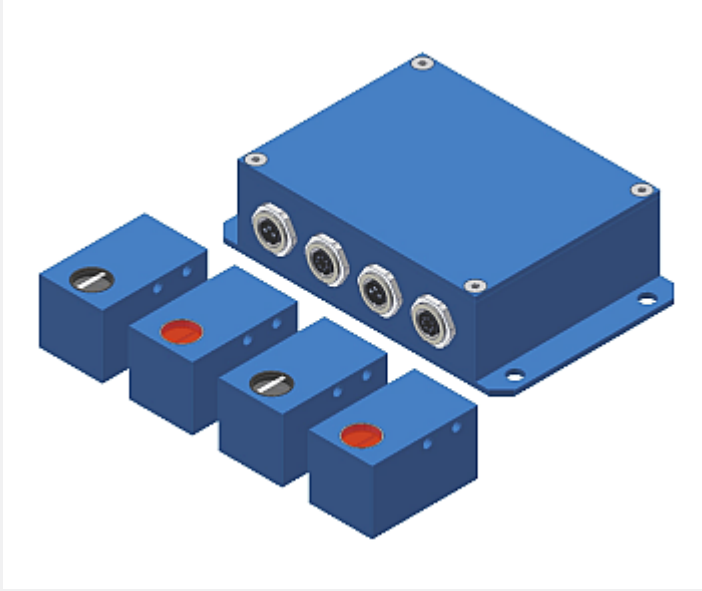

- **Suitable for operation with 2 sensor frontends**
- Line laser <0.39 mW, wave length 670 nm, laser class 1
- Visible laser line, typ. 6 mm x 1 mm
- Measuring range typ. 6.4 mm, resolution typ. 2 µm
- Transmitter/receiver distance max. 2 m
- Integrated interference filter
- CCD line detector with 512 pixel, 4096 subpixel (8-fold)
- External teach button and potentiometer for tolerance setting
- RS232 interface (USB or Ethernet converter available)
- 2 digital inputs, 3 digital outputs
- 1 analog output 0 ... +10V (optionally 4 ... 20mA)
- Switching state indication via 4 LEDs (1x grn, 2x red, 1x yel)

Design

Product name:

L-LAS-TB-6-CON1-2x (control unit, 0 ... +10V)
L-LAS-TB-6-CON1-2x-4/20 (control unit , 4... 20mA)
(incl. Windows® PC software L-LAS-TB-MS-Scope)

L-LAS-TB/90-(AxB)*-T (transmitter)
L-LAS-TB/90-(AxB)*-R (receiver)

***AxB** (position of the laser line):
6x1 (A=6mm, B=1mm)
1x6 (A=1mm, B=6mm)

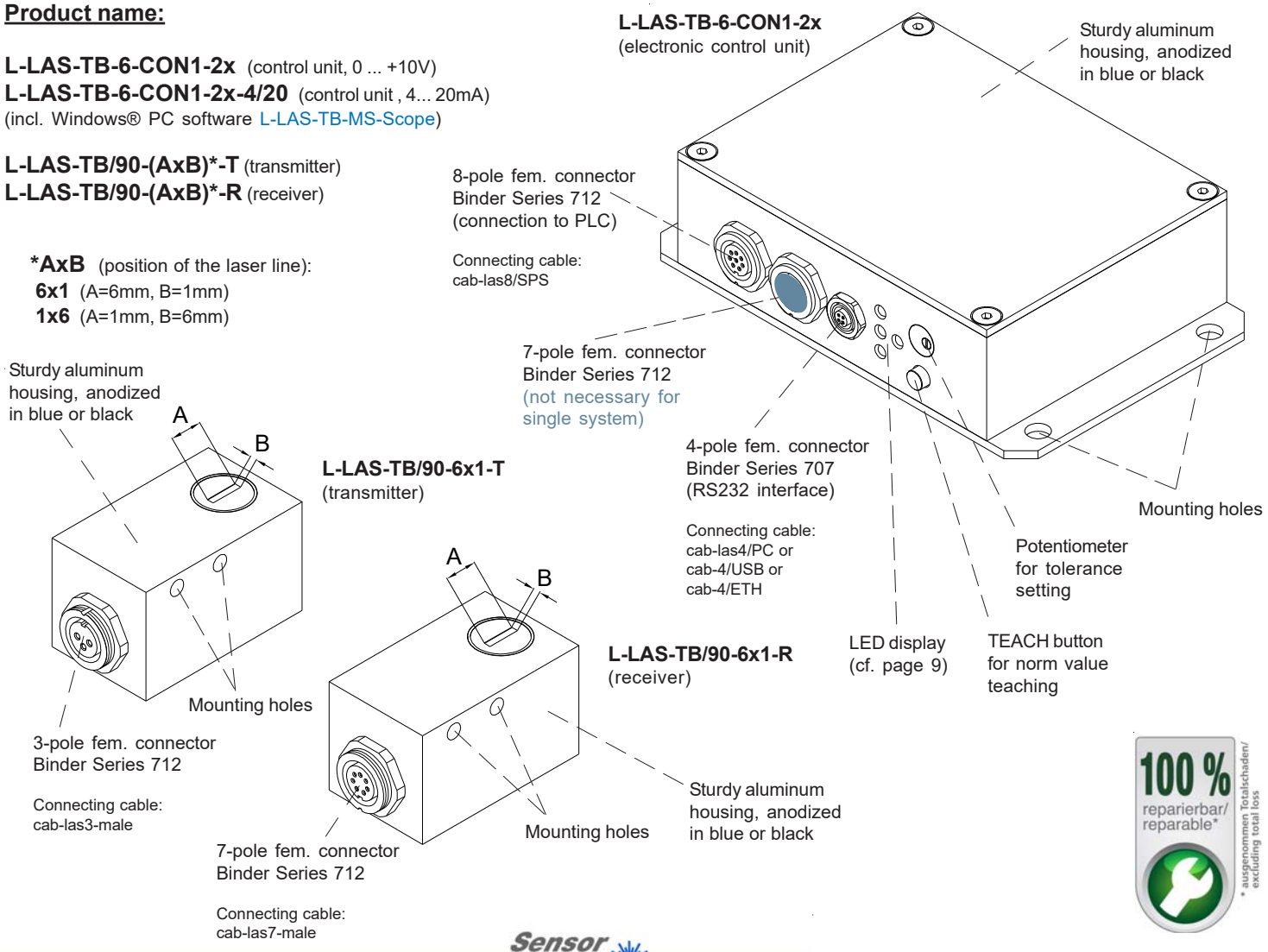

100 % reparierbar/ reparable*
* ausgenommen Totalschaden/ excluding total loss

Technical Data

Model	L-LAS-TB-6-CON1-2x L-LAS-TB/90-(6)-T, L-LAS-TB/90-(6)-R	L-LAS-TB-6-CON1-2x-4/20 L-LAS-TB/90-(6)-T, L-LAS-TB/90-(6)-R
Laser	Semi conductor laser, 670 nm, DC operation, <0.39 mW max. optical power, laser class 1 acc. to DIN EN 60825-1. The use of these laser transmitters therefore requires no additional protective measures.	
Max. distance transmitter/receiver	2 m	
Measuring range	typ. 6.4 mm	
Resolution	typ. 2 µm	
Reproducibility	typ. ± 2 µm	
Linearity	typ. 0,05% FSR (full scale range)	
Optical filter	Interference filter	
Analog output (ANA)	Voltage output 0 ... +10V	Current output 4 ... 20mA
Digital outputs (OUT0, OUT1, OUT2)	pnp bright-switching (pnp n.c.)/npn dark-switching (npn n.o.) or pnp dark-switching (pnp n.o.)/npn bright-switching (npn n.c.), adjustable under Windows®, 100 mA, short-circuit-proof	
Digital inputs (IN0, IN1)	IN0: External trigger, IN1: Teach/Reset (double function), input voltage +Ub/0V, with protective circuit	
Voltage supply	+24VDC (± 10%)	
Sensitivity setting	Adjustable by means of potentiometer TOL or under Windows® via PC	
Laser power correction	Dynamic/static mode adjustable under Windows® via PC	
Current consumption	typ. 200 mA	
Enclosure rating	Electronics: IP54, optics: IP67	
Operating temperature range	-10°C ... +50°C	
Storage temperature range	-20°C ... +85°C	
Housing material	Aluminum, anodized in blue or black	
Housing dimensions (without connectors)	Control unit L-LAS-TB-6-CON1-2x: LxWxH approx. 110 mm x 70 mm x 28 mm Transmitter and receiver frontend L-LAS-TB/90-(6)-T/-R: each LxWxH approx. 40 mm x 24 mm x 24 mm	
Type of connectors control unit L-LAS-TB-6-CON1-2x	8-pole female connector type Binder 712 (PLC/Power), 4-pole female connector type Binder 707 (PC/RS232), 7-pole female connector type Binder 712 (not used with single system)	
Type of connector transmitter	Transmitter frontend L-LAS-TB/90-6x1-T or L-LAS-TB/90-1x6-T: 3-pole female connector Binder 712	
Type of connector receiver	Receiver frontend L-LAS-TB/90-6x1-R or L-LAS-TB/90-1x6-R: 7-pole female connector Binder 712	
Teach button	Teach button at the housing for set point value teaching	
LED display	LED red (+) : Measured value > upper tolerance threshold LED green : Measured value within tolerance window LED red (-) : Measured value < lower tolerance threshold LED yellow: For sensor adjustment (multifunctional LED)	
EMC test acc. to	DIN EN 60947-5-2 CE	
Scan frequency	max. 650 Hz	
Max. switching current	100 mA, short-circuit-proof	
Interface	RS232, parameterisable under Windows®	
Connecting cables	Connection L-LAS-TB-6-CON1-2x to PC: cab-las4/PC or cab-4/USB or cab-4/ETH Connection L-LAS-TB-6-CON1-2x to PLC: cab-las8/SPS or cab-las8/SPS-w Connection L-LAS-TB/90-(6)-T to L-LAS-TB-6-CON1-2x: cab-las3-male Connection L-LAS-TB/90-(6)-R to L-LAS-TB-6-CON1-2x: cab-las7-male	
Output polarity	Bright-/dark-switching, adjustable under Windows®	

Dimensions

L-LAS-TB-6-CON1-2x:

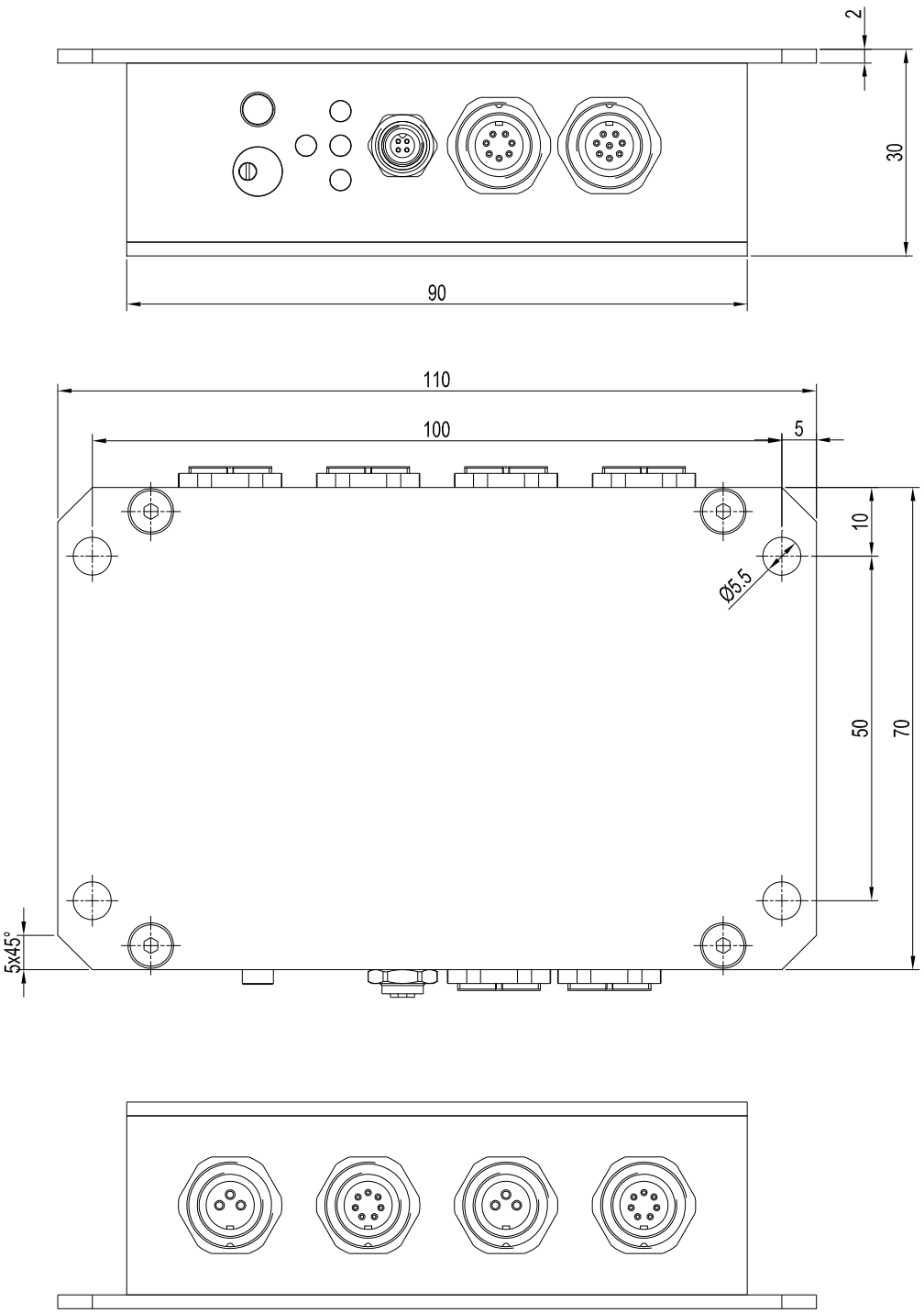

All dimensions in mm

Dimensions

L-LAS-TB/90-6x1-R or
L-LAS-TB/90-1x6-R
(receiver)

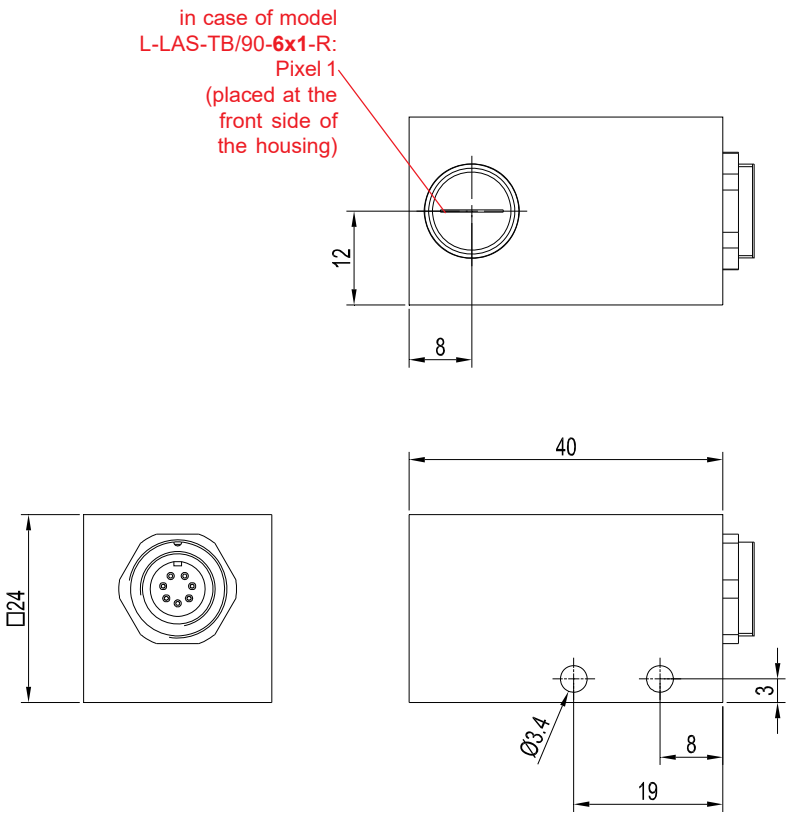

L-LAS-TB/90-6x1-T or
L-LAS-TB/90-1x6-T
(transmitter)

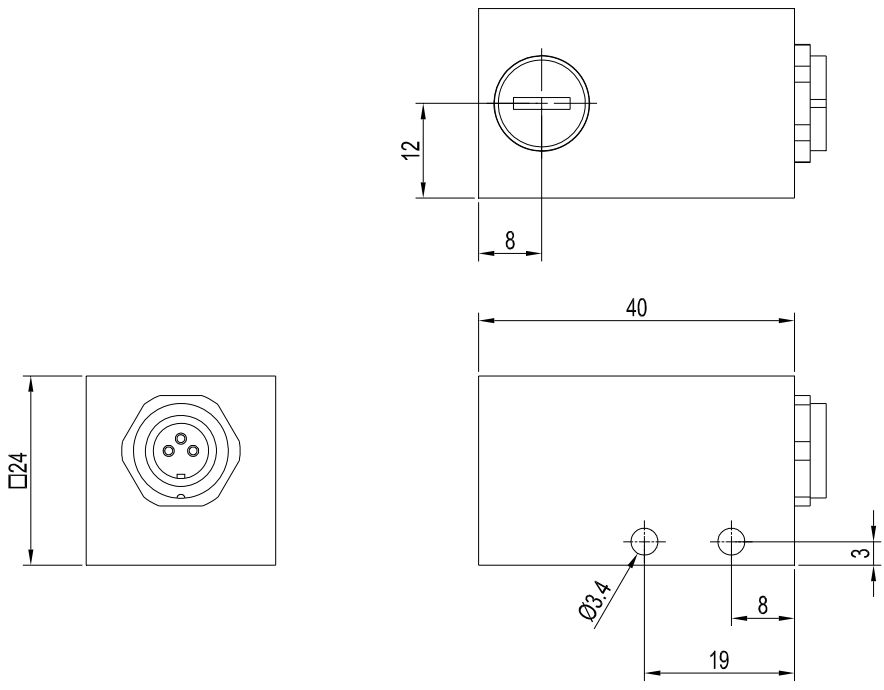

All dimensions in mm

Connector Assignment

Connection L-LAS-TB-6-CON1-2x to PLC: 8-pole fem. connector Binder Series 712

Pin:	(Color of wire):	Assignment:
1	white	GND (0V)
2	brown	+24VDC (+Ub)
3	green	IN0 (EXT TRIGGER)
4	yellow	IN1 (TEACH / RESET)
5	grey	OUT0 (-)
6	pink or black	OUT1 (+)
7	blue	OUT2 (OK)
8	red	ANA (0 ... +10V) **in case of version -4/20:** **ANA (4 ... 20mA)**

Connecting cable:
cab-las8/SPS-(length) or
cab-las8/SPS-w-(length) (angle type 90°)
(standard length 2m)

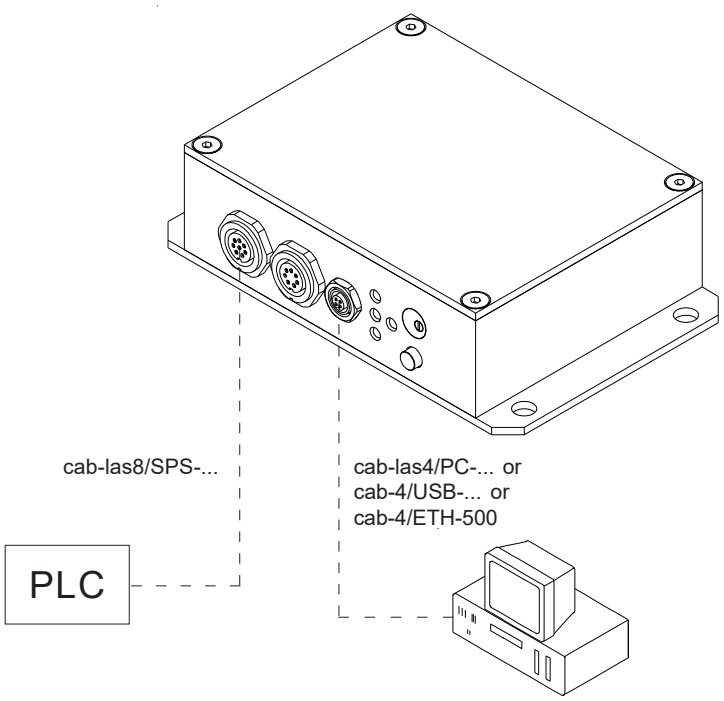

Connection L-LAS-TB-6-CON1-2x to PC: 4-pole fem. connector Binder Series 707

Pin:	Assignment:
1	+24VDC (+Ub, OUT)
2	GND (0V)
3	RxD
4	TxD

Connection via RS232 interface at the PC:
Connecting cable:
cab-las4/PC-(length)
cab-las4/PC-w-(length) (angle type 90°)
(standard length 2m)

alternative:
Connection via USB interface at the PC:
USB converter
(incl. driver software):
cab-4/USB-(length)
cab-4/USB-w-(length) (angle type 90°)
(standard length 2m)

alternative:
Connection to local network via Ethernet bus:
Ethernet converter
(incl. software „SensorFinder“):
cab-4/ETH-500
(standard length 0.5m)

Optional:
External CAT5 cable, e.g.
cab-eth/M12D-RJ45-flx-(length)

Connector Assignment

Connection transmitter L-LAS-TB/90-(6)-T to L-LAS-TB-6-CON1-2x: 2x 3-pole fem. connectors Binder Series 712

Pin:	Assignment:
1	+5VDC
2	GND (0V)
3	I-CONTROL (0V ... +5V)

Connecting cable:
cab-las3-male-(length)
cab-las3-male-w-(length) (angle type 90°)
(standard length 2m)

Connection receiver L-LAS-TB/90-(6)-R to L-LAS-TB-6-CON1-2x: 2x 7-pole fem. connectors Binder Series 712

Pin:	Assignment:
1	GND (0V)
2	+6.9VDC
3	START
4	CLOCK
5	GAIN
6	GND (0V)
7	VIDEO

Connecting cable:
cab-las7-male-(length)
cab-las7-male-w-(length) (angle type 90°)
(standard length 1m, max. length 1.5m)

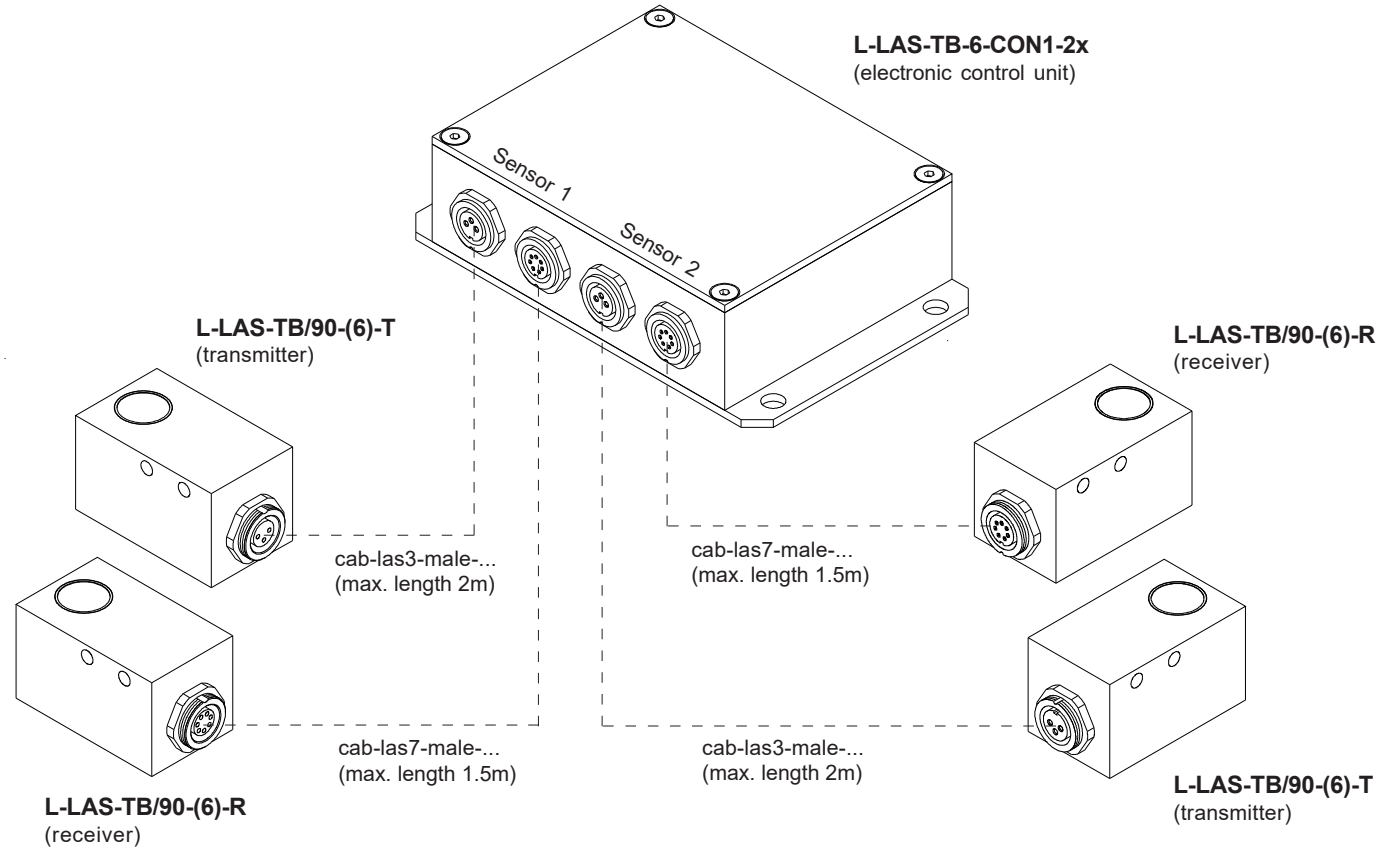

Connecting Cables

Connection L-LAS-TB-6-CON1-2x to PLC:
cab-las8/SPS oder
cab-las8/SPS-w (angle type 90°)

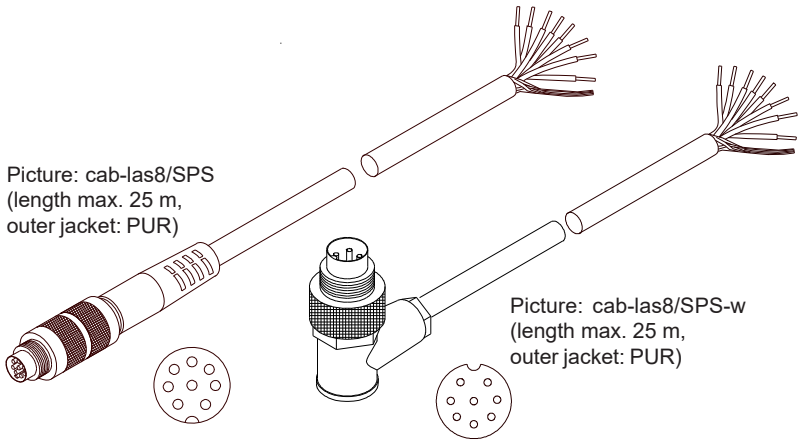

Picture: cab-las8/SPS
(length max. 25 m,
outer jacket: PUR)

Picture: cab-las8/SPS-w
(length max. 25 m,
outer jacket: PUR)

Connection L-LAS-TB-6-CON1-2x to PC:
cab-las4/PC oder
cab-las4/PC-w (angle type 90°) or
cab-4/USB or
cab-4/USB-w (angle type 90°) or
cab-4/ETH-500

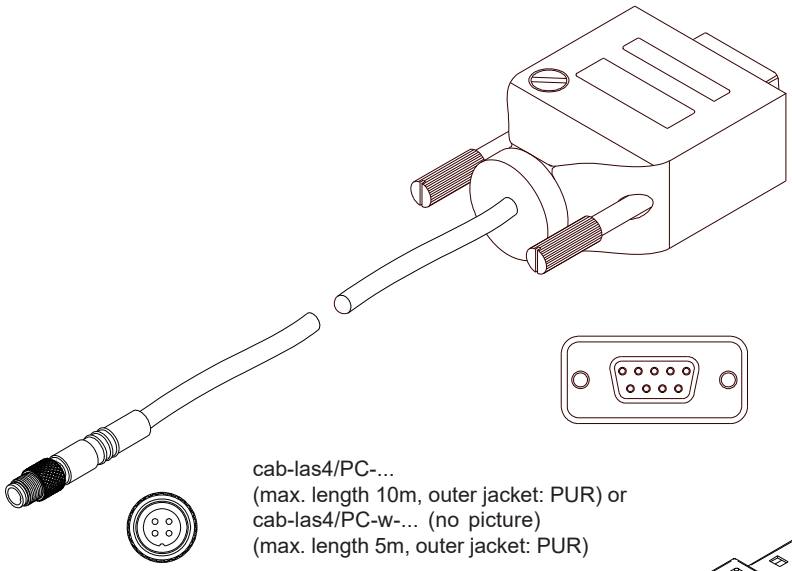

cab-las4/PC-...
(max. length 10m, outer jacket: PUR) or
cab-las4/PC-w-... (no picture)
(max. length 5m, outer jacket: PUR)

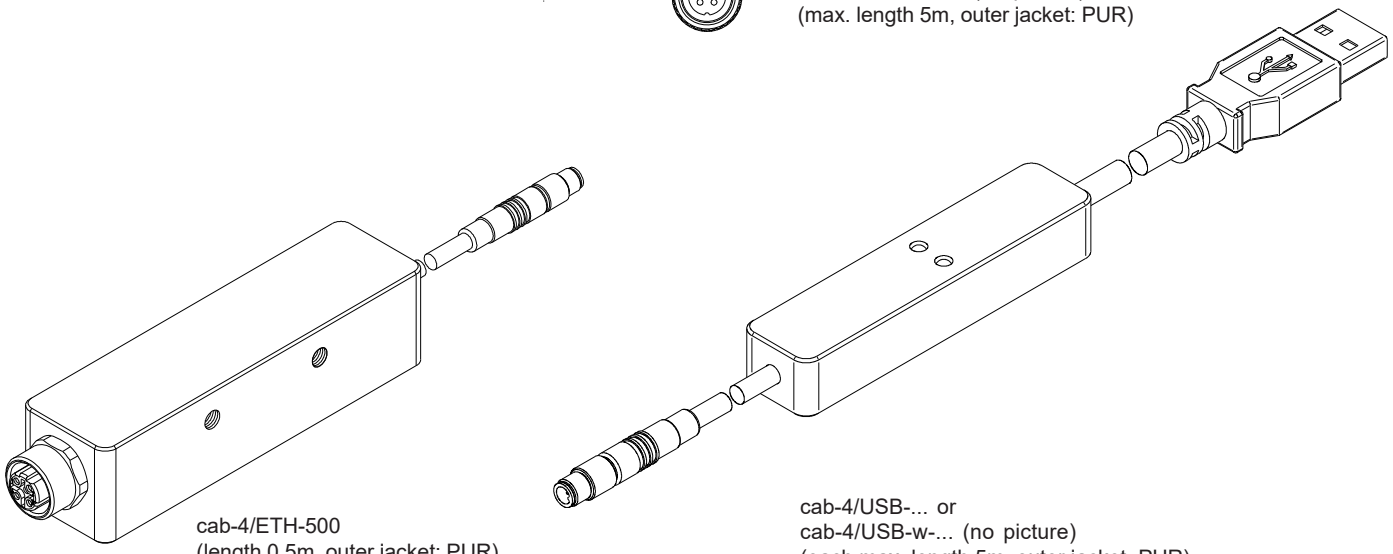

cab-4/ETH-500
(length 0.5m, outer jacket: PUR)
4-pole M12 fem. conn. (D-coded)
for connection of an external
CAT5 cable, e.g.
cab-eth/M12D-RJ45-flx-(length)

cab-4/USB-... or
cab-4/USB-w-... (no picture)
(each max. length 5m, outer jacket: PUR)

Connecting Cables

Connection L-LAS-TB/90-(6)-T to L-LAS-TB-6-CON1-2x:
cab-las3-male or
cab-las3-male-w (angle type 90°)

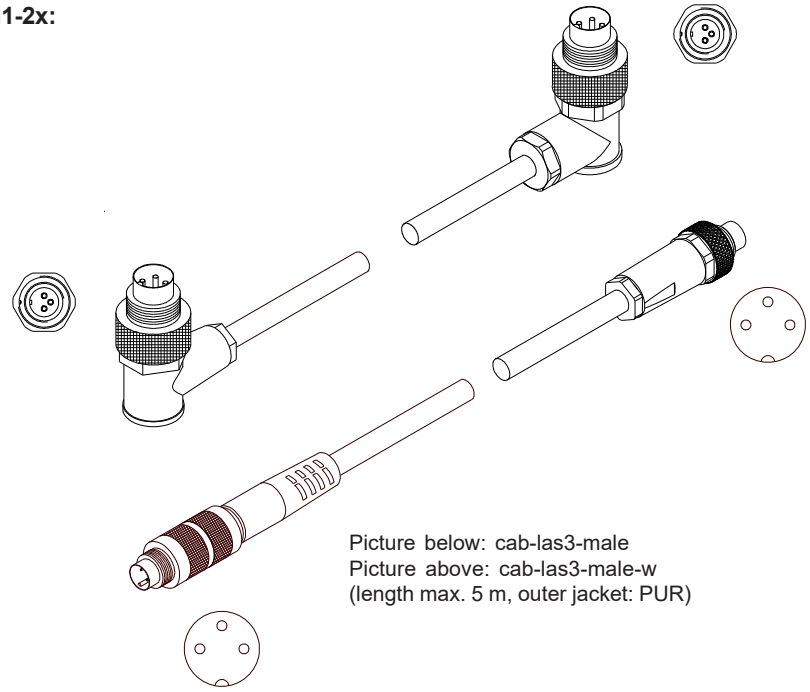

Picture below: cab-las3-male
Picture above: cab-las3-male-w
(length max. 5 m, outer jacket: PUR)

Connection L-LAS-TB/90-(6)-R to L-LAS-TB-6-CON1-2x:
cab-las7-male or
cab-las7-male-w (angle type 90°)

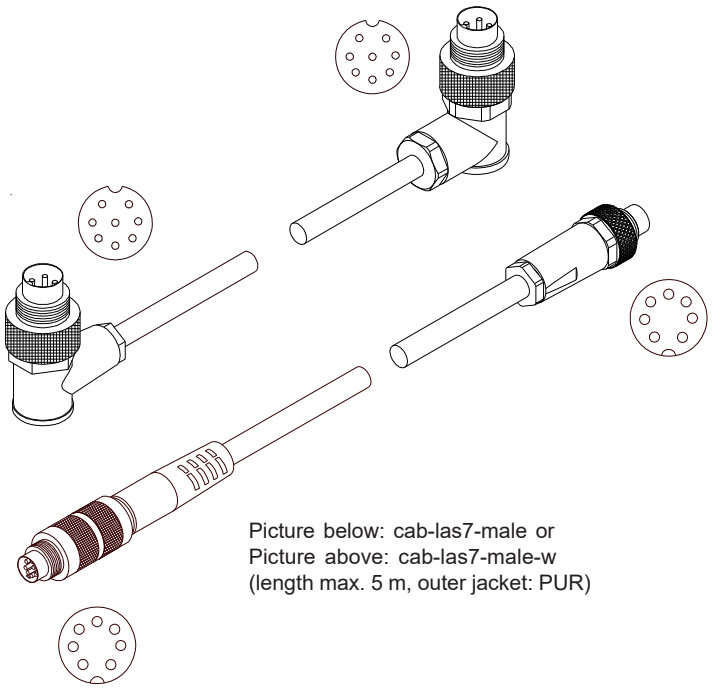

Picture below: cab-las7-male or
Picture above: cab-las7-male-w
(length max. 5 m, outer jacket: PUR)

LED Display

LED display L-LAS-TB-6-CON1-2x:

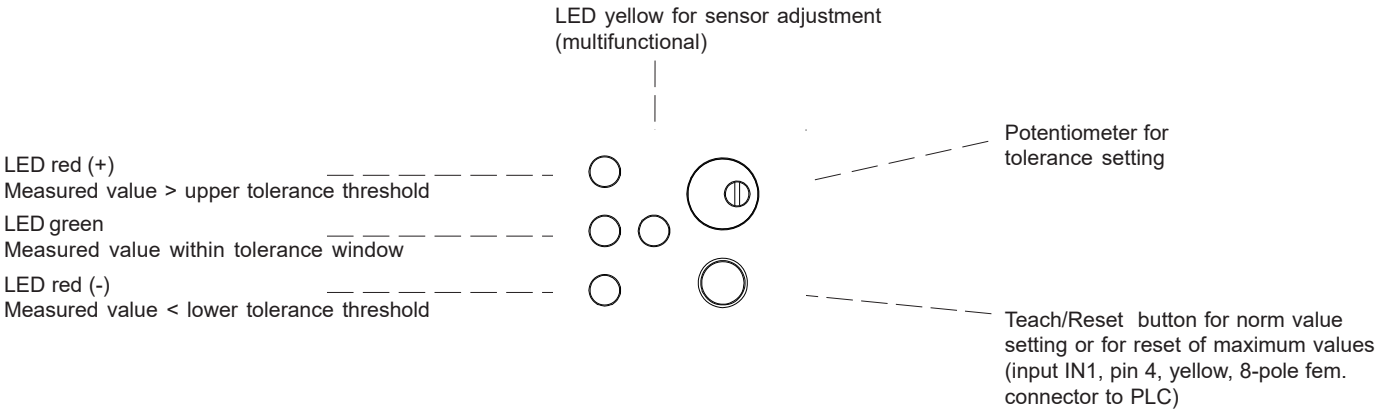

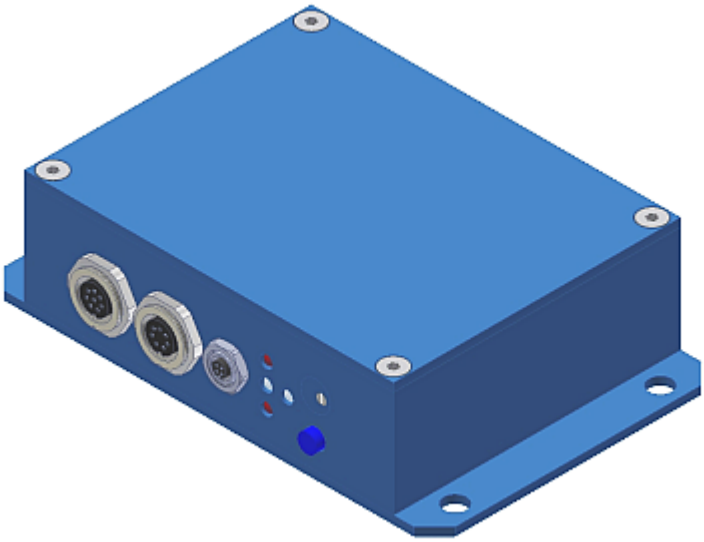

Laser Information

The laser line sensors of L-LAS-TB series comply with laser class 1 according to EN 60825-1. Under reasonably foreseeable conditions a class 1 laser is safe. The reasonably foreseeable conditions are kept during specified normal operation. The use of these laser transmitters therefore requires no additional protective measures.

The laser line sensors of L-LAS-TB series are supplied with an information label „CLASS 1 LASER PRODUCT“.

CLASS 1 LASER PRODUCT

DIN EN 60825-1: 2008-05

Parameterization

Windows® software L-LAS-TB-MS-Scope:

The L-LAS-TB-...-CON1-2x sensor can be easily parameterised with the Windows® user interface.
For this purpose the sensor is connected to the PC with the serial interface cable cab-las4/PC (or with the USB converter cab-4/USB or the Ethernet converter cab-4/ETH). When parameterisation is finished, the PC can be disconnected again.

Windows® user interface:

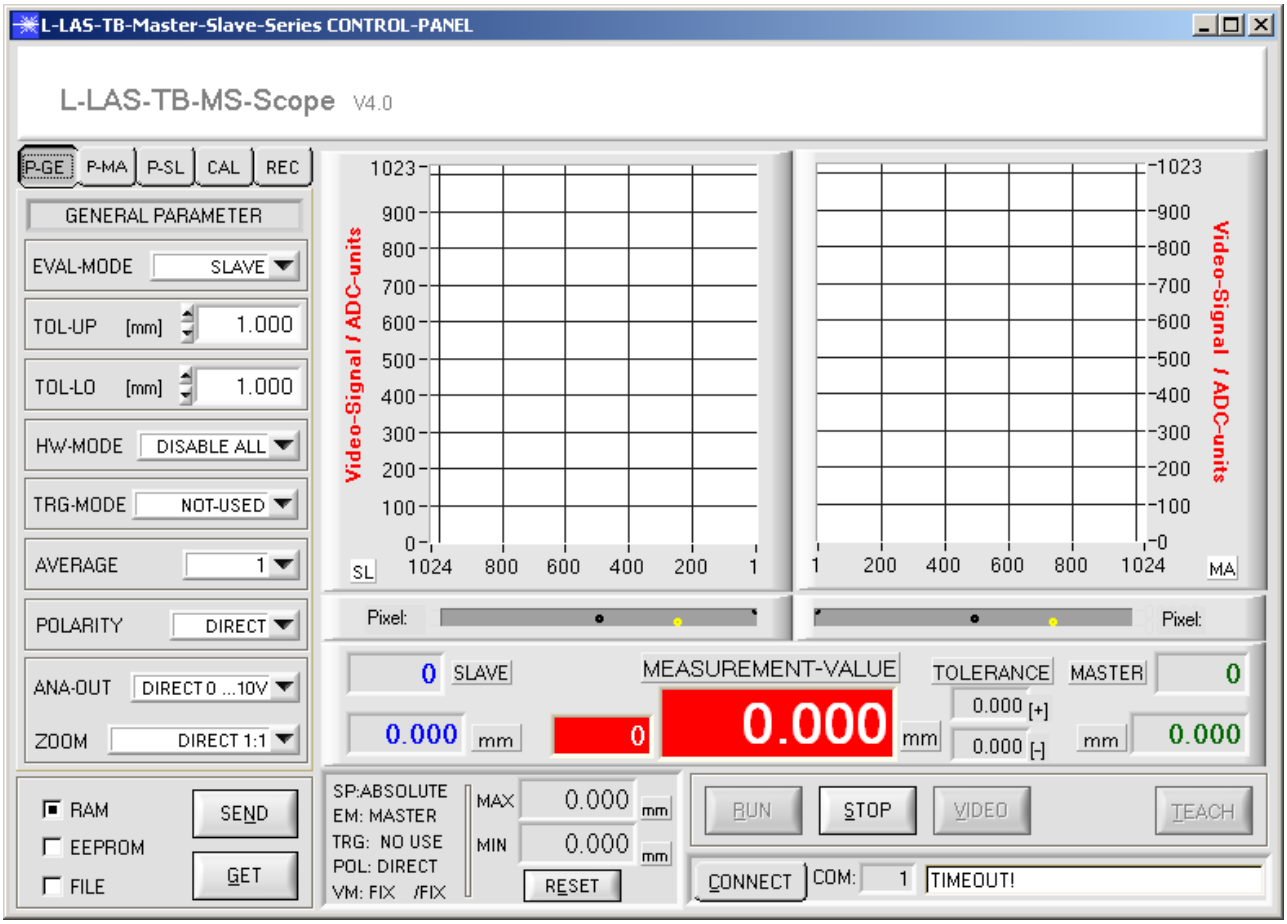

In the case of line sensors with 512, 256, or 128 pixels the parameters related to the pixels will be adapted correspondingly!

With the help of the L-LAS-TB-MS-Scope software the following settings can be made at the sensor:

- Visualization of the measuring data in numerical and graphic form
- Setting of laser power for the respective laser transmitter
- Polarity adjsutment of digital outputs OUT0, OUT1, and OUT2
- Different evaluation modes to choose from
- Setting of norm value and tolerance band width
- Storage of parameters in the RAM, EEPROM store at the electronic control unit or to a configuration file at the hard disk of the PC