L-LAS Series

L-LAS-LT-165-AL

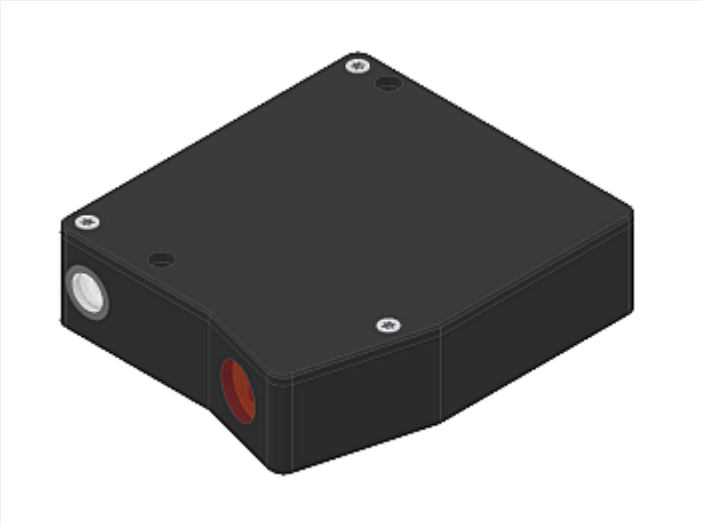

- Line laser <1 mW, wave length 670 nm, laser class 2
- Visible red laser line, typ. 0.5 mm x 3 mm
- Reference distance 160 mm
- Measuring range typ. 200 mm
- Start of measuring range at typ. 75 mm
- Resolution typ. 60 µm
- Interference filter and red light filter integrated
- CCD line detector with 512 pixel, 2048 subpixel
- RS232 interface (USB or Ethernet converter available)
- Windows® user interface
- 2 digital inputs, 3 digital outputs (HIGH/LOW/GO)
- 1 analog output (0...+10V or 4...20mA)
- Max. meas. frequency: 2 kHz (Normal Speed), 3.8 kHz (Fast Speed)
- Switching state indication via 4 LEDs (2x red/grn, 2x yel/grn)
- Optics cover made of scratch-resistant glass

Design

Product name:

L-LAS-LT-165-CL
(incl. Windows® software
L-LAS-LT-Scope V5.x)

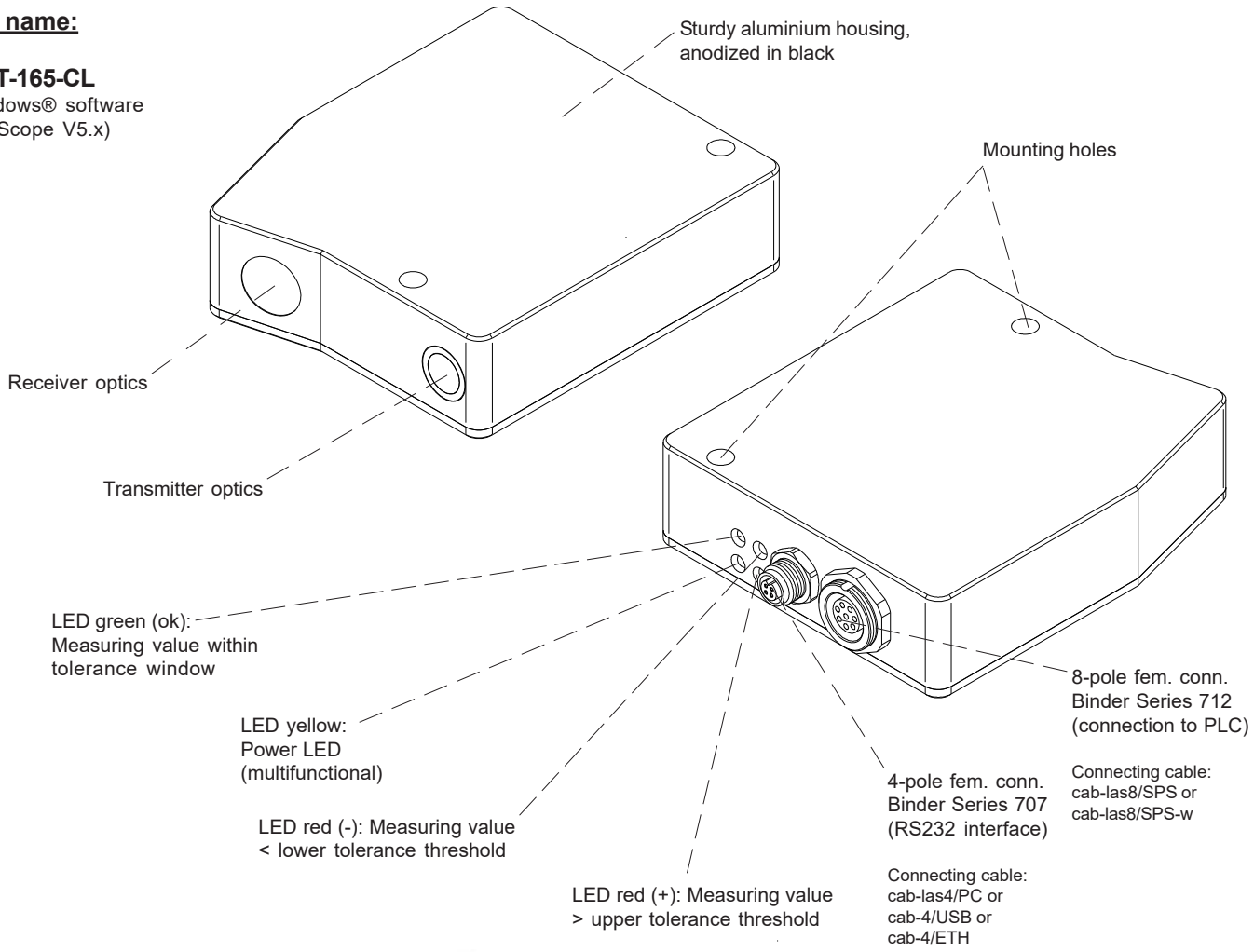

Technical Data

Model	L-LAS-LT-165-AL
Light source	Semiconductor laser, 670 nm, DC-operation, 1 mW max. opt. power, laser class 2 acc. to DIN EN 60825-1. The use of these laser sensors therefore requires no additional protective measures.
Reference distance	160 mm
Measuring range	typ. 200 mm
Start of measuring range	typ. 75 mm (measured from housing edge, cf. picture beam path)
End of measuring range	typ. 275 mm (measured from housing edge, cf. picture beam path)
Resolution	typ. 60 µm
Reproducibility	typ. ± 60 µm
Linearity	<= 0.3% of full scale output (FSO)
Laser line geometry	typ. 0.5 mm x 3 mm
Optical filter	Interference filter, red light filter RG630
Analog output (ANA)	Voltage output (0 ... +10V) or current output (4 ... 20mA), adjustable under Windows® via PC
Digital outputs (3x) (OUT0, OUT1, OUT2)	OUT0: (-) Measuring value < lower tolerance threshold OUT1: (+) Measuring value > upper tolerance threshold OUT2: (ok) Measuring value within tolerance range pnp bright-switching/npn dark-switching or pnp dark-switching/npn bright-switching, adjustable under Windows®
Digital inputs (IN0, IN1)	IN0: External trigger, IN1: Teach/Reset (double function) Input voltage +Ub/0V, with protective circuit
Voltage supply	+24VDC (± 10%)
Sensitivity setting	adjustable under Windows® via PC
Laser power correction	adjustable under Windows® via PC
Current consumption	typ. 200 mA
Enclosure rating	Electronics: IP64, optics: IP67
Temperature stability	0.01% of measuring range/°C
Temperature ranges	Operating temperature range: -10°C ... +50°C, storage temperature range: -20°C ... +85°C
Housing material	Aluminum, anodized in black
Housing dimensions	LxWxH approx. 74.82 mm x 65 mm x 20 mm (without flange connectors)
Type of connector	8-pole circular fem. connector type Binder 712 (PLC/Power) 4-pole circular fem. connector type Binder 707 (PC/RS232)
Connecting cable	to PLC: cab-las8/SPS or cab-las8/SPS-w to PC/RS232 interface: cab-las4/PC or cab-las4/PC-w to PC/USB interface: cab-4/USB or cab-4/USB-w to PC/Ethernet interface: cab-4/ETH
LED indication (4x two-color LED)	2x two-color-LED red/green and 1x two-color-LED yellow/green for tolerance band monitoring: red (+) = Measuring value > upper tolerance threshold red (-) = Measuring value < lower tolerance threshold green (ok) = Measuring value within tolerance window 1x two-color LED yellow/green (multifunctional): yellow = Power indication
EMC test acc. to	DIN EN 60947-5-2 CE
Measuring frequency	in case of video speed NORMAL: max. 2 kHz in case of video speed FAST: max. 3.8 kHz (can be switched via Windows®)
Max. switching current	100 mA, short-circuit proof
Interface	RS232, parameterisable under Windows®
Output polarity	Bright-/dark-switching, can be switched under Windows®

Dimensions

L-LAS-LT-165-AL

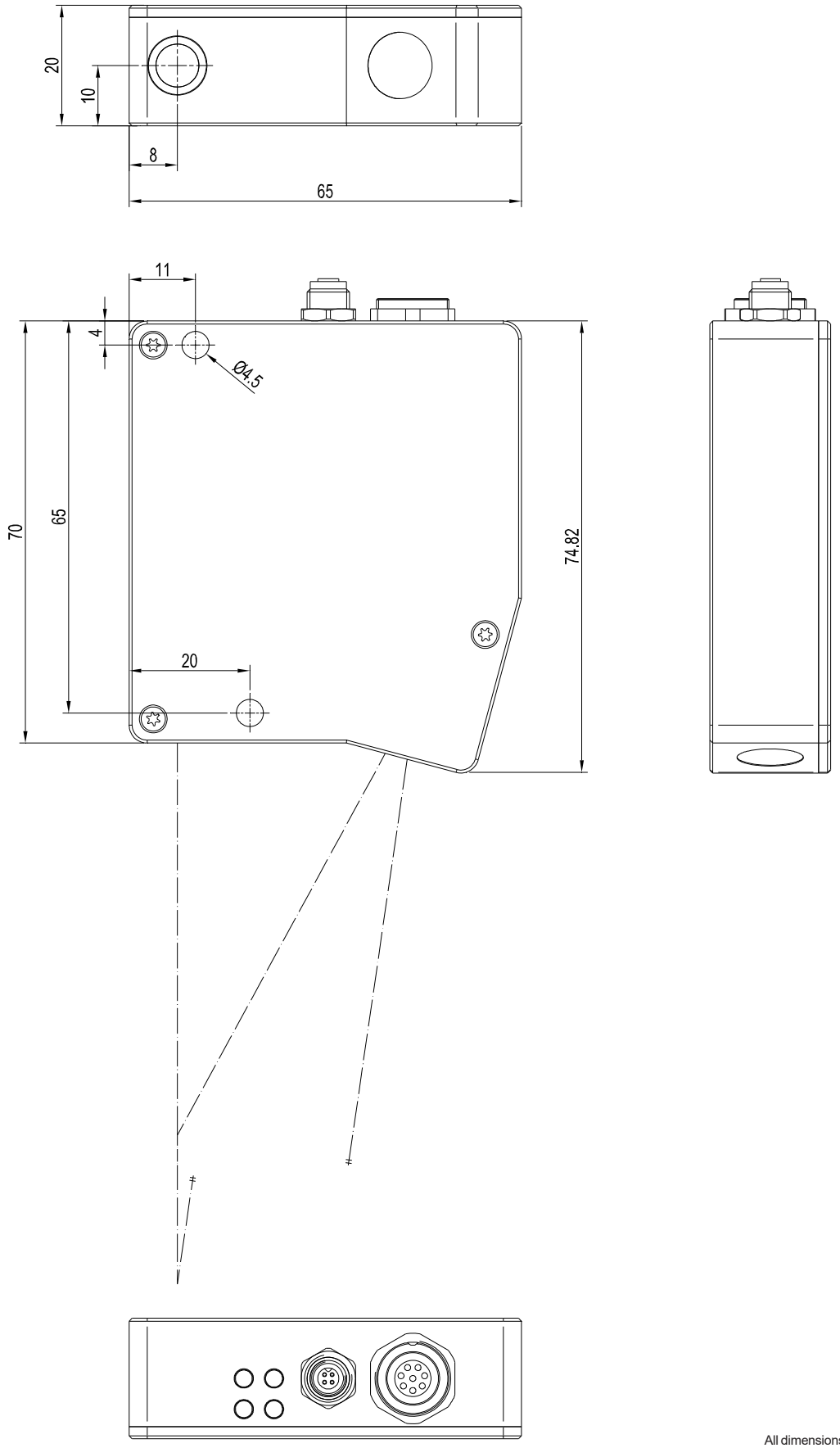

All dimensions in mm

Beam Path

L-LAS-LT-165-AL

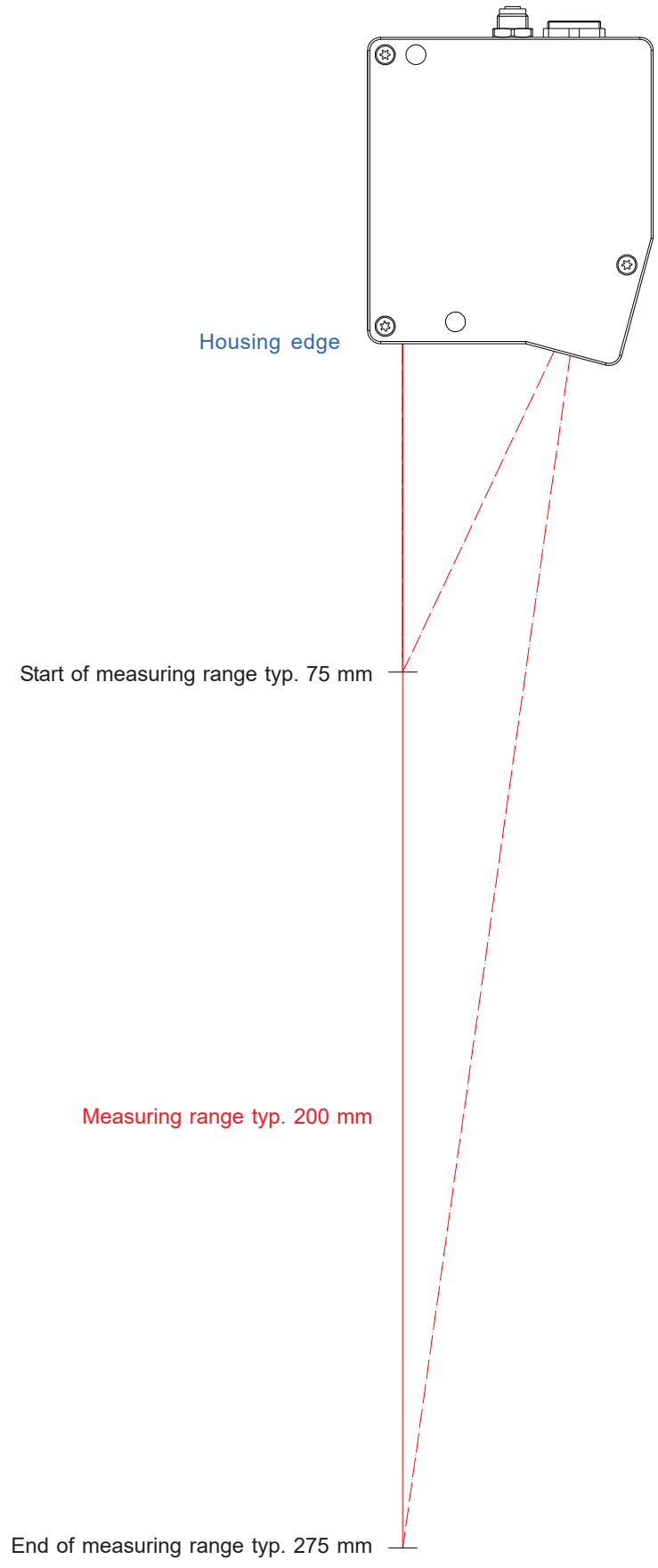

Connector Assignment

Connection to PLC:
8-pole fem. connector Binder Series 712

Pin:	Color:	Assignment:
1	white	GND (0V)
2	brown	+24VDC (± 10%)
3	green	IN0 (EXT TRIGGER)
4	yellow	IN1 (TEACH / RESET)
5	grey	OUT0 (-)
6	pink or black	OUT1 (+)
7	blue	OUT2 (OK)
8	red	ANA (U-OUT voltage 0 ... +10V or I-OUT current 4 ... 20mA)

Connecting cable:
cab-las8/SPS-(length) or
cab-las8/SPS-w-(length) (angle type 90°)
(standard length 2m)

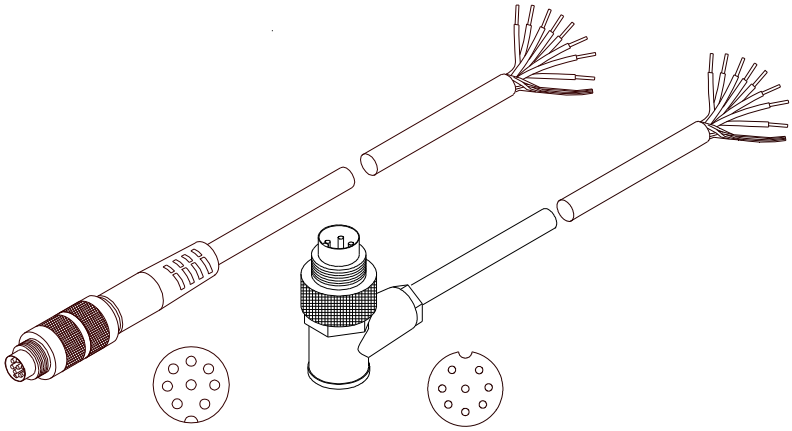

cab-las8/SPS-...
(max. length 25m,
outer jacket: PUR)

cab-las8/SPS-w-...
(max. length 25m,
outer jacket: PUR)

Connection to PC:
4-pole fem. connector Binder Series 707

Pin:	Assignment:
1	+24VDC (+Ub, OUT)
2	GND (0V)
3	RxD
4	TxD

Connection via RS232 interface at the PC:
Connecting cable:
cab-las4/PC-(length)
cab-las4/PC-w-(length) (angle type 90°)
(standard length 2m)

alternative:
Connection via USB interface at the PC:
USB converter (incl. driver software):
cab-4/USB-(length)
cab-4/USB-w-(length) (angle type 90°)
(standard length 2m)

alternative:
Connection to local network via Ethernet bus:
Ethernet converter (incl. software „SensorFinder“):
cab-4/ETH-500
(standard length 0.5m)

Optional: External CAT5 cable, e.g.
cab-eth/M12D-RJ45-flx-(length)

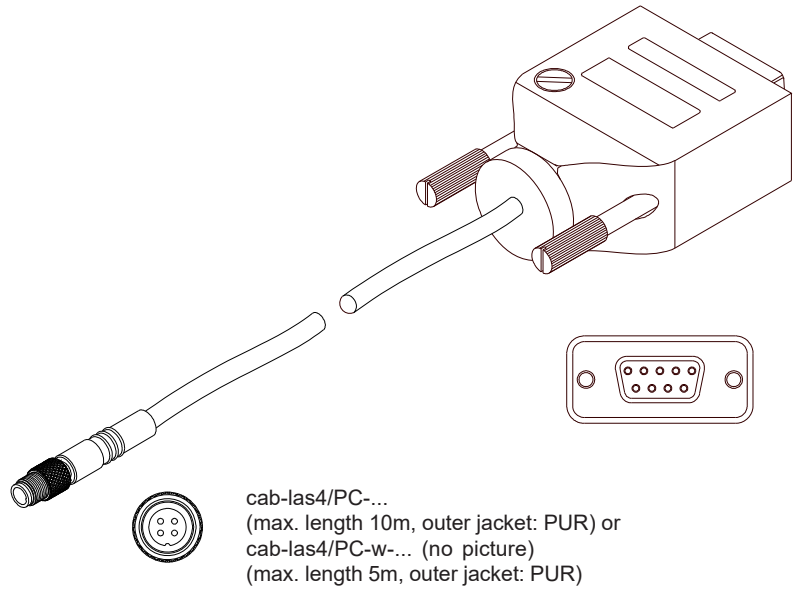

cab-las4/PC-...
(max. length 10m, outer jacket: PUR) or
cab-las4/PC-w-... (no picture)
(max. length 5m, outer jacket: PUR)

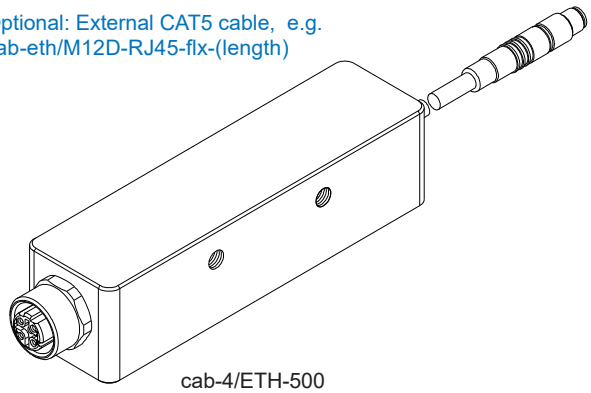

cab-4/ETH-500
(length 0.5m, outer jacket: PUR)
4-pole M12 fem. conn. (D-coded)
for connection of an external
CAT5 cable, e.g.
cab-eth/M12D-RJ45-flx-(length)

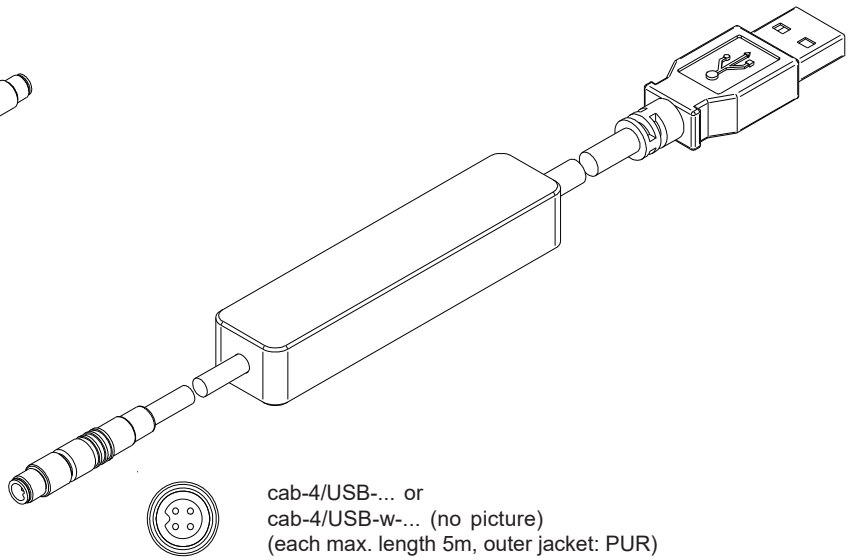

cab-4/USB-... or
cab-4/USB-w-... (no picture)
(each max. length 5m, outer jacket: PUR)

LED Display

LED display:

(+) **Power**

(-) **(ok)**

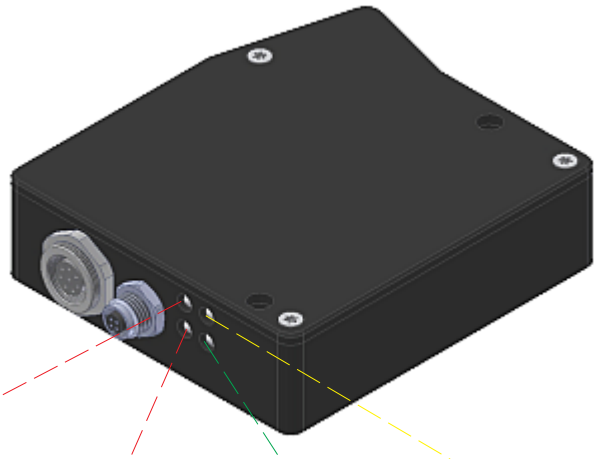

LED red (+):
Measuring value > upper tolerance threshold
(OUT1)

LED yellow:
Power LED
(multifunctional)

LED red (-):
Measuring value < lower tolerance threshold
(OUT0)

LED green (ok):
Measuring value within tolerance window

Laser Warning

The laser transmitters of the line sensors L-LAS-LT-165-AL comply with laser class 2 according to EN 60825-1. The use of these laser transmitters therefore requires no additional protective measures.

The laser line sensors L-LAS-LT-165-AL are supplied with a laser warning label „CLASS II LASER PRODUCT“.



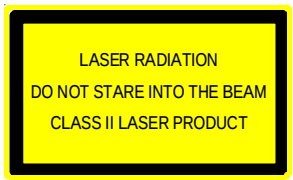

Parameterization

Windows® software L-LAS-LT-Scope:
(The current software version is available for download on our website.)

The L-LAS-LT sensor can easily be parameterised with the Windows® user interface. For this purpose the sensor is connected to the PC with the serial interface cable cab-las4/PC respectively by means of USB converter cab-4/USB or Ethernet converter cab-4/ETH. When parameterisation is finished, the PC can be disconnected again.

Windows® user interface:

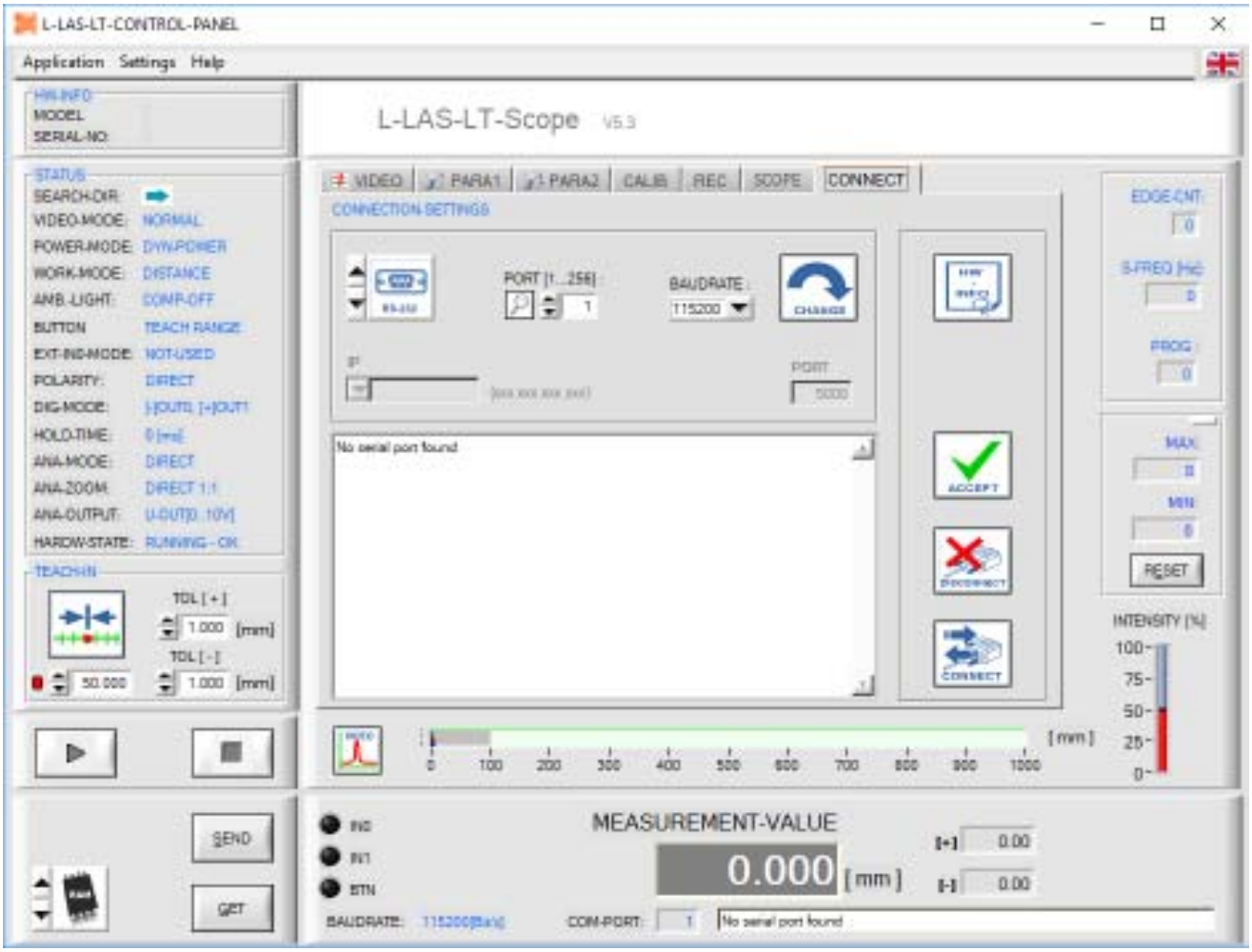

With the help of the L-LAS-LT-Scope software the following settings can be made at the sensor:

- Setting of laser power and type of automatic power correction
- Polarity of digital outputs
- Different evaluation modes
- Start of the teach process by software button
- Setting of tolerance ranges for monitoring the measured value

Furthermore, various numerical and graphical measured quantities can be visualized with the L-LAS-LT-Scope software. For example, the raw data of the CCD line sensor can be displayed graphically and numerically.