L-LAS Series

L-LAS-LT-55-HS (High Speed)

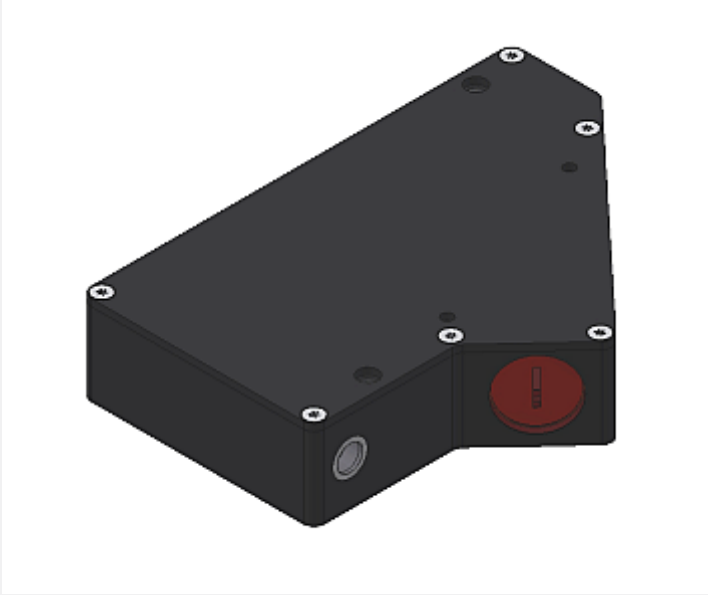

- Line laser <1 mW, wave length 670 nm, laser class 2
- Visible red laser line, typ. 0.2 mm x 3 mm
- Measuring range typ. 8 mm
- Start of measuring range at typ. 51 mm
- Resolution typ. 5 µm
- Interference filter and red light filter integrated
- CCD line detector with 512 pixel, 2048 subpixel
- External teach button and potentiometer for tolerance setting
- RS232 interface (USB or Ethernet adaptor available)
- Windows® user interface
- 2 digital inputs, 3 digital outputs
- 1 analog output (either voltage 0 ... +10V or current 4 ... 20mA)
- Scan frequency max. 600 Hz
- Switching state indication via 4 LEDs (1x grn, 2x red, 1x yel)
- Optics cover made of scratch-resistant glass

Design

Product name:

L-LAS-LT-55-HS (analog output 0...+10V)
L-LAS-LT-55-HS-4/20 (analog output 4 ... 20mA)
(incl. Windows® PC software L-LAS-LT-Scope)

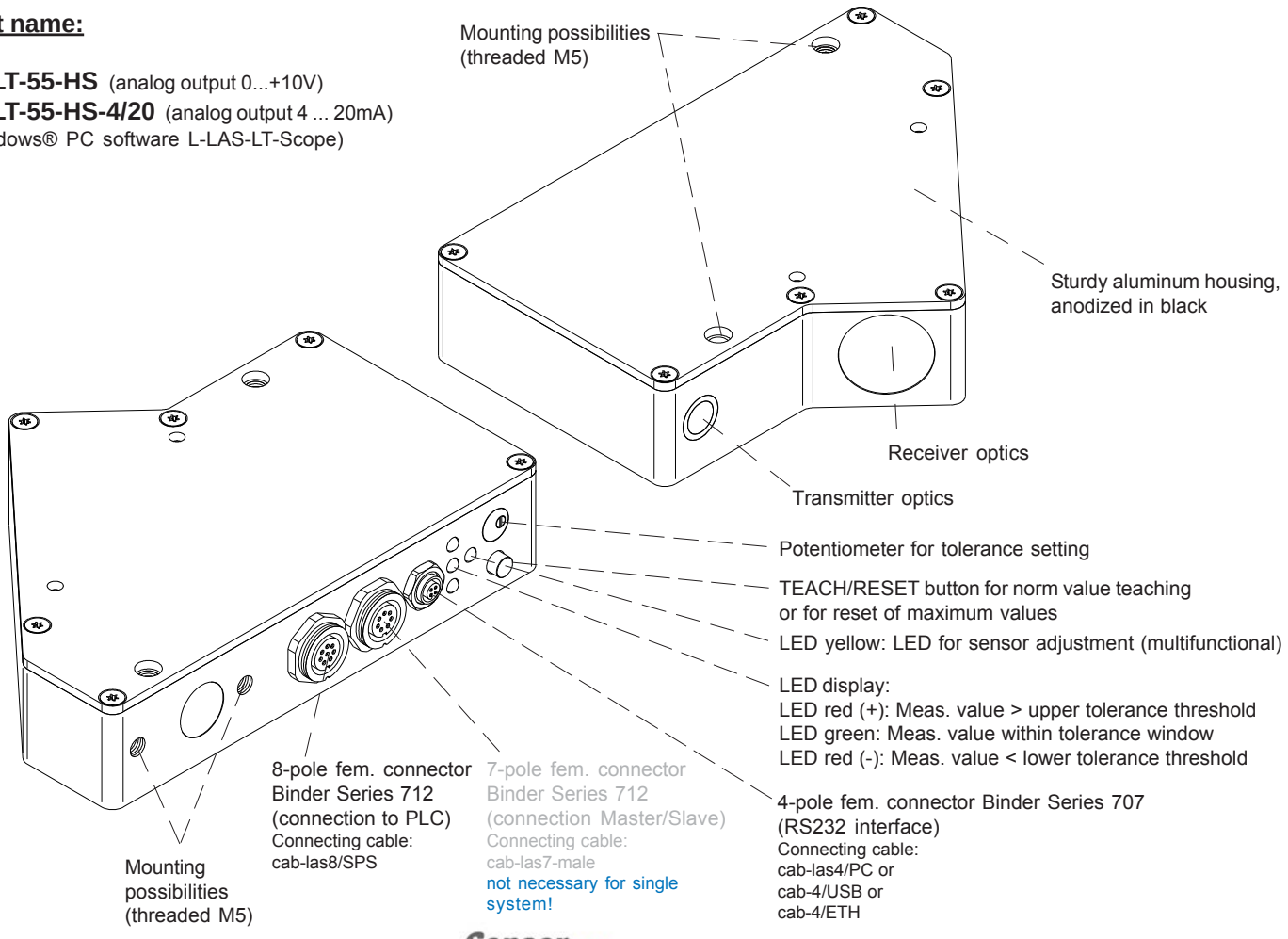

Technical Data

Model	L-LAS-LT-55-HS	L-LAS-LT-55-HS-4/20
Light source	Semiconductor laser, 670 nm, DC operation, 1 mW max. opt. power, laser class 2 acc. to DIN EN 60825-1. The use of these laser sensors therefore requires no additional protective measures.	
Measuring range	typ. 8 mm	
Start of measuring range	typ. 51 mm (measured from housing edge, cf. picture beam path)	
End of measuring range	typ. 59 mm (measured from housing edge, cf. picture beam path)	
Resolution / reproducibility	typ. 5 µm / typ. ± 5 µm	
Linearity	0.2% FSR (full scale range)	
Laser line geometry	typ. 0.2 mm x 3 mm	
Optical filters	Interference filter, red light filter	
Analog output (1x)	Voltage output (0 ... +10V)	Current output (4 ... 20mA)
Digital outputs (3x) (OUT0, OUT1, OUT2)	pnp bright-switching/npn dark-switching or pnp pnp dark-switching/npn bright-switching, adjustable under Windows®, 100 mA, short-circuit proof	
Digital inputs (2x) (IN0, IN1)	IN0: External trigger, IN1: Teach/Reset (double function) Input voltage +Ub/0V, with protective circuit	
Voltage supply	+24VDC (± 10%)	
Sensitivity setting	via potentiometer TOL or under Windows® via PC	
Laser power correction	adjustable under Windows® via PC	
Current consumption	typ. 200 mA	
Enclosure rating	Electronics: IP54, optics: IP67	
Temperature stability	0.01% of measuring range/°C	
Operating temperature range	-10°C ... +50°C	
Storage temperature range	-20°C ... +85°C	
Housing material	Aluminum, anodized in black	
Housing dimensions	LxWxH approx. 120 mm x 85.19 mm x 25 mm (without connector flanges)	
Connector type	8-pole fem. connector type Binder 712 (PLC/Power) 4-pole fem. connector type Binder 707 (PC/RS232) 7-pole circular fem. connector type Binder 712 (not necessary for single system)	
Connecting cables	to PLC: cab-las8/SPS or cab-las8/SPS-w to PC/RS232 interface: cab-las4/PC or cab-las4/PC-w to PC/USB interface: cab-4/USB or cab-4/USB-w to PC/Ethernet interface: cab-4/ETH	
Potentiometer	for tolerance window setting	
Teach/reset button	for norm value teaching or for reset of maximum values via input IN1	
LED display	LED red (+) : Measuring value > upper tolerance threshold LED green : Measuring value within tolerance window LED red (-) : Measuring value < lower tolerance threshold LED yellow : LED for sensor adjustment (multifunctional)	
EMC test acc. to	DIN EN 60947-5-2 CE	
Scan frequency	max. 600 Hz	
Max. switching current	100 mA, short-circuit proof	
Interface	RS232, parameterisable under Windows® via PC	
Output polarity	Bright/dark-switching, can be set under Windows® via PC	

Dimensions

L-LAS-LT-55-HS
L-LAS-LT-55-HS4/20

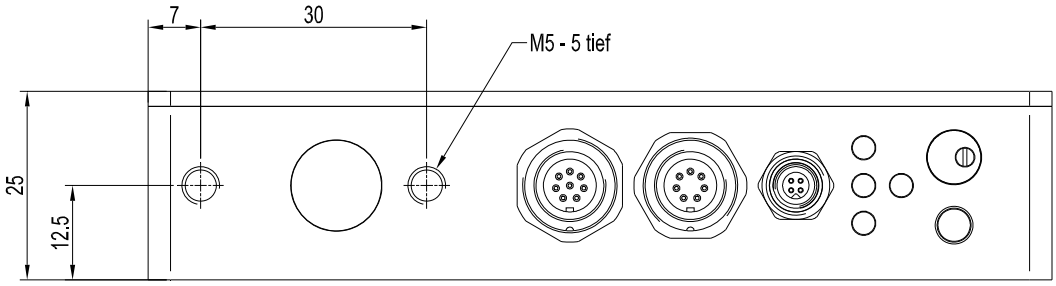

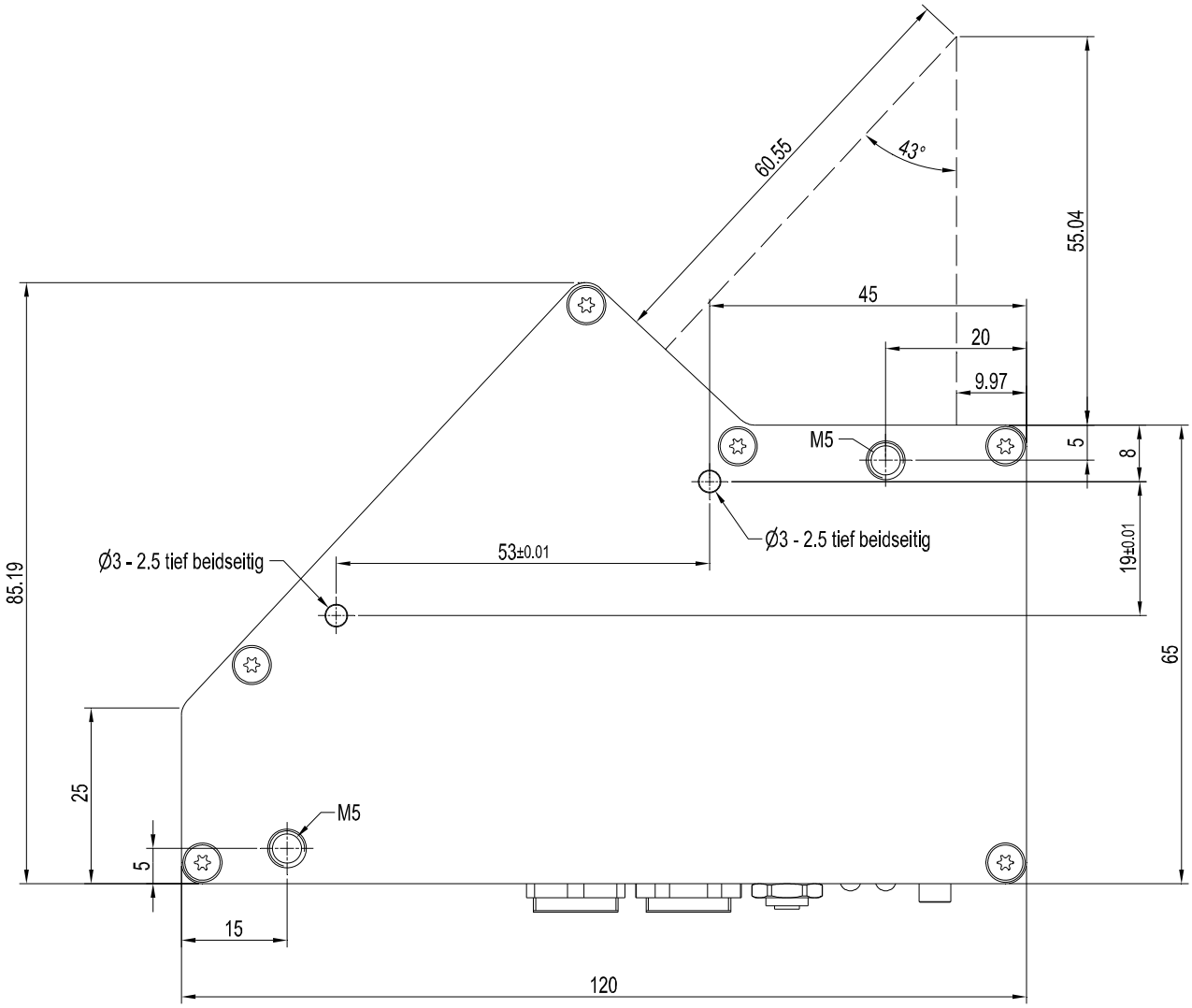

All dimensions in mm

Beam Path

L-LAS-LT-55-HS
L-LAS-LT-55-HS-4/20

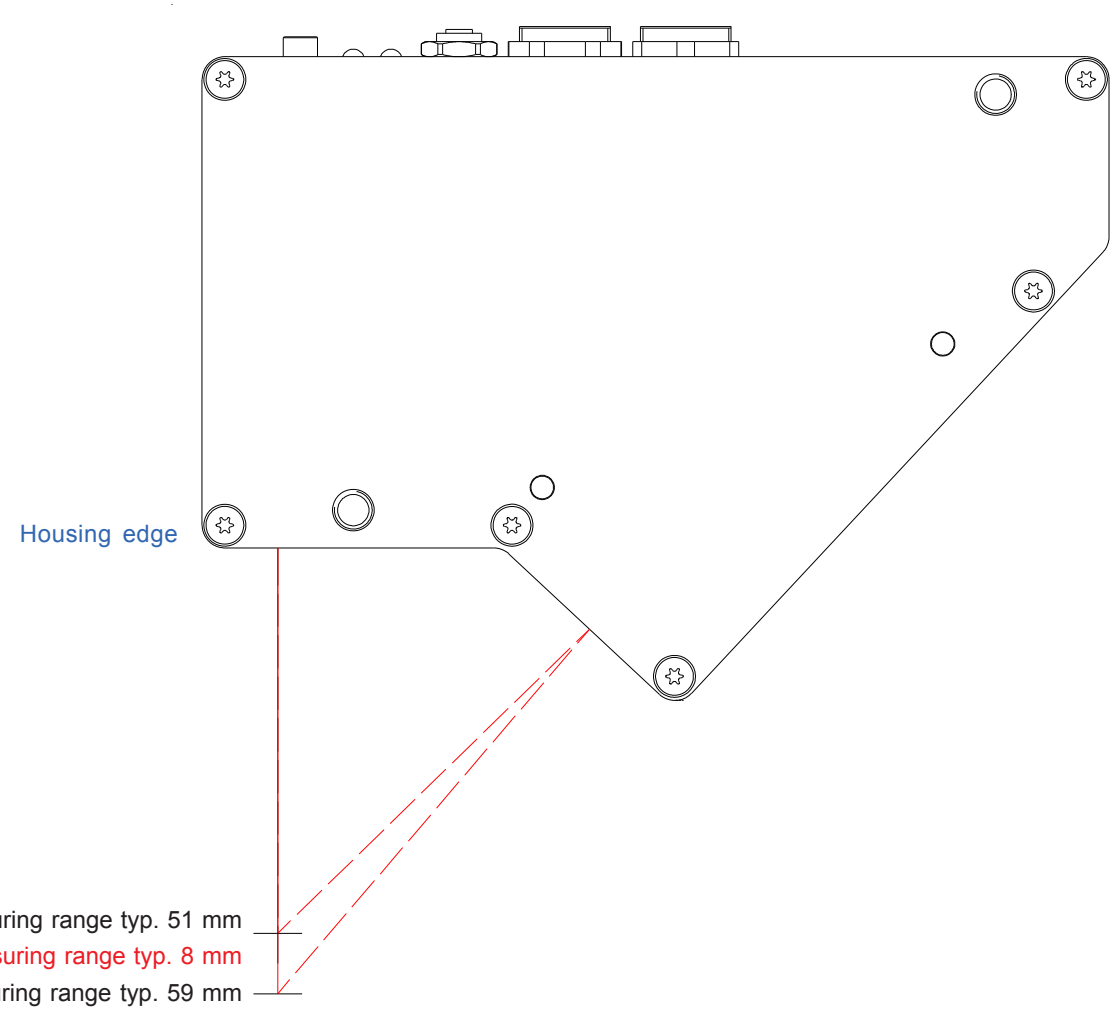

Connector Assignment

Connection to PLC:
8-pole fem. connector Binder Series 712

Pin:	Color:	Assignment:
1	white	GND (0V)
2	brown	+24VDC (±10%)
3	green	N0 (EXT TRIGGER)
4	yellow	N1 (TEACH / RESET)
5	grey	OUT0 (-)
6	pink	OUT1 (+)
7	blue	OUT2 (OK)
8	red	ANA (voltage 0 ... +10V) optional with type 4/20: ANA (current 4 ... 20mA)

Connecting cable:
cab-las8/SPS-(length)
cab-las8/SPS-w-(length) (angle type, 90°)
(standard length 2m)

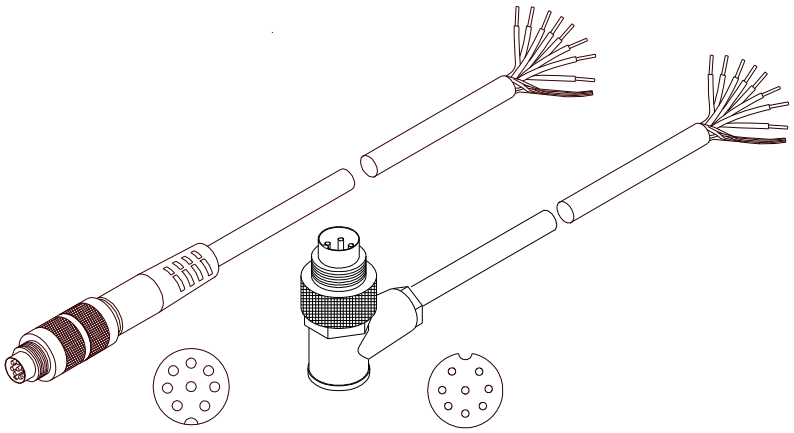

cab-las8/SPS-...
(max. length 25m, outer jacket: PUR)

cab-las8/SPS-w-...
(max. length 25m, outer jacket: PUR)

Connection to PC:
4-pole fem. connector Binder Series 707

Pin:	Assignment:
1	+24VDC (+Ub, OUT)
2	GND (0V)
3	RxD
4	TxD

Connection via RS232 interface at the PC:
Connecting cable:
cab-las4/PC-(length)
cab-las4/PC-w-(length) (angle type 90°)
(standard length 2m)

alternative:
Connection via USB interface at the PC:
Connecting cable (incl. driver software):
cab-4/USB-(length)
cab-4/USB-w-(length) (angle type 90°)
(standard length 2m)

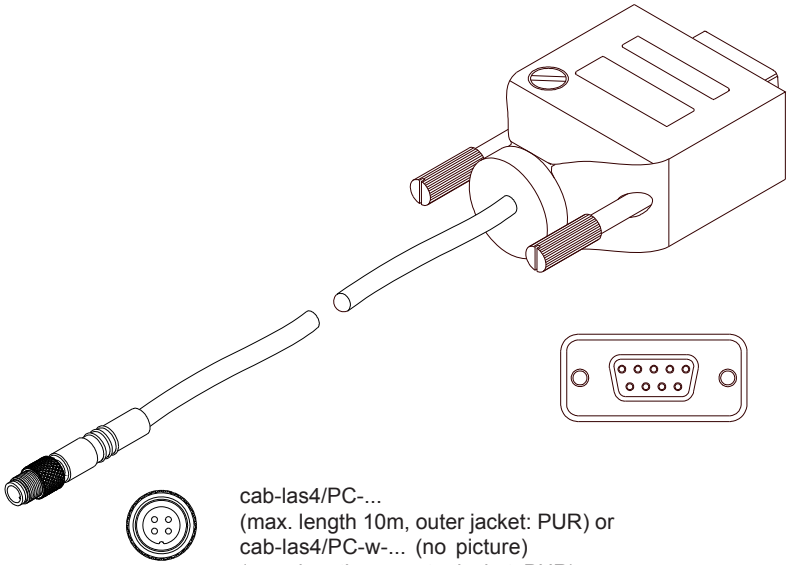

cab-las4/PC-...
(max. length 10m, outer jacket: PUR) or
cab-las4/PC-w-... (no picture)
(max. length 5m, outer jacket: PUR)

alternative:
Connection to local network via Ethernet bus:
Adapter (incl. software „SensorFinder“):
cab-4/ETH-500
(standard length 0.5m)

Optional:
External CAT5 cable, e.g.
cab-eth/M12D-RJ45-flx-(length)

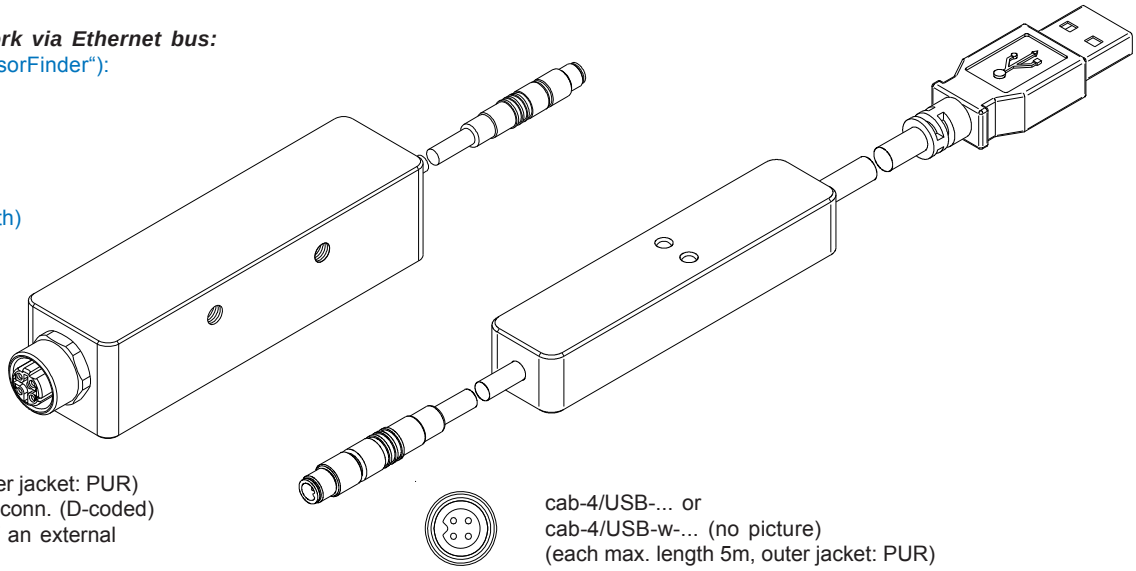

cab-4/ETH-500
(length 0.5m, outer jacket: PUR)
4-pole M12 fem. conn. (D-coded)
for connection of an external
CAT5 cable, e.g.
cab-eth/M12D-RJ45-flx-(length)

cab-4/USB-... or
cab-4/USB-w-... (no picture)
(each max. length 5m, outer jacket: PUR)

Connector Assignment

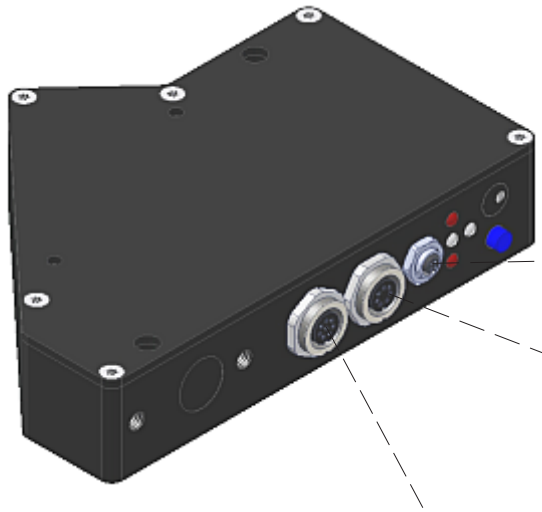

4-pole fem. connector Binder Series 707
(connection to PC)

7-pole fem. connector Binder Series 712
not necessary for single system!
(only for connection of Master and Slave)

8-pole fem. connector Binder Series 712
(connection to PLC)

LED Display

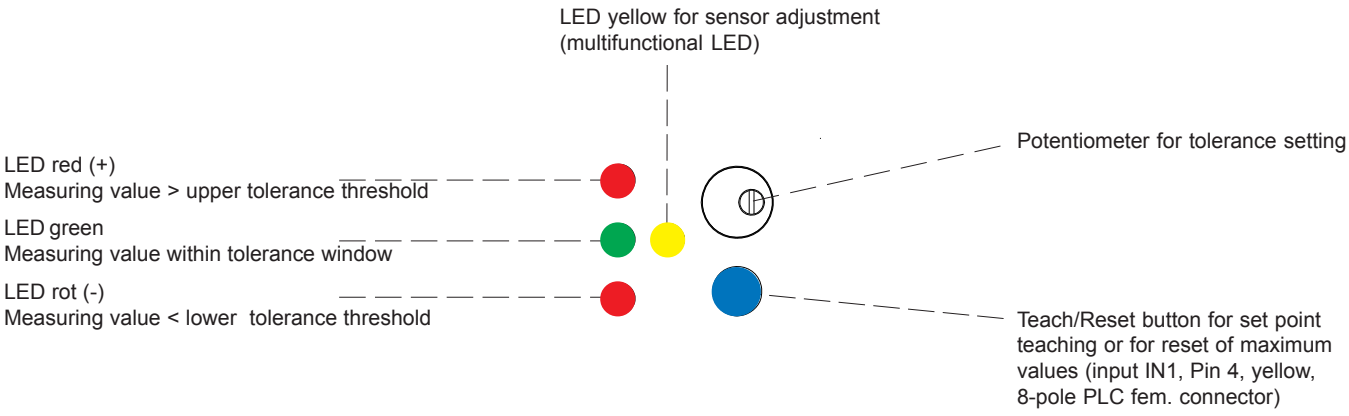

Laser Warning

The laser line sensors of L-LAS-LT Series comply with laser class 2 according to EN 60825-1. The use of these laser transmitters therefore requires no additional protective measures.

The laser line sensors of L-LAS-LT Series are supplied with a laser warning label.





Parameterization

Windows® PC software L-LAS-LT-Scope:

(The current software version is available for download on our website.)

The L-LAS-LT sensor can be easily parameterised with the Windows® user interface. For this purpose the sensor is connected to the PC with the serial interface cable cab-las4/PC (or with USB cable cab-4/USB or with Ethernet adaptor cab-4/ETH). When parameterisation is finished, the PC can be disconnected again.

Windows® user interface:

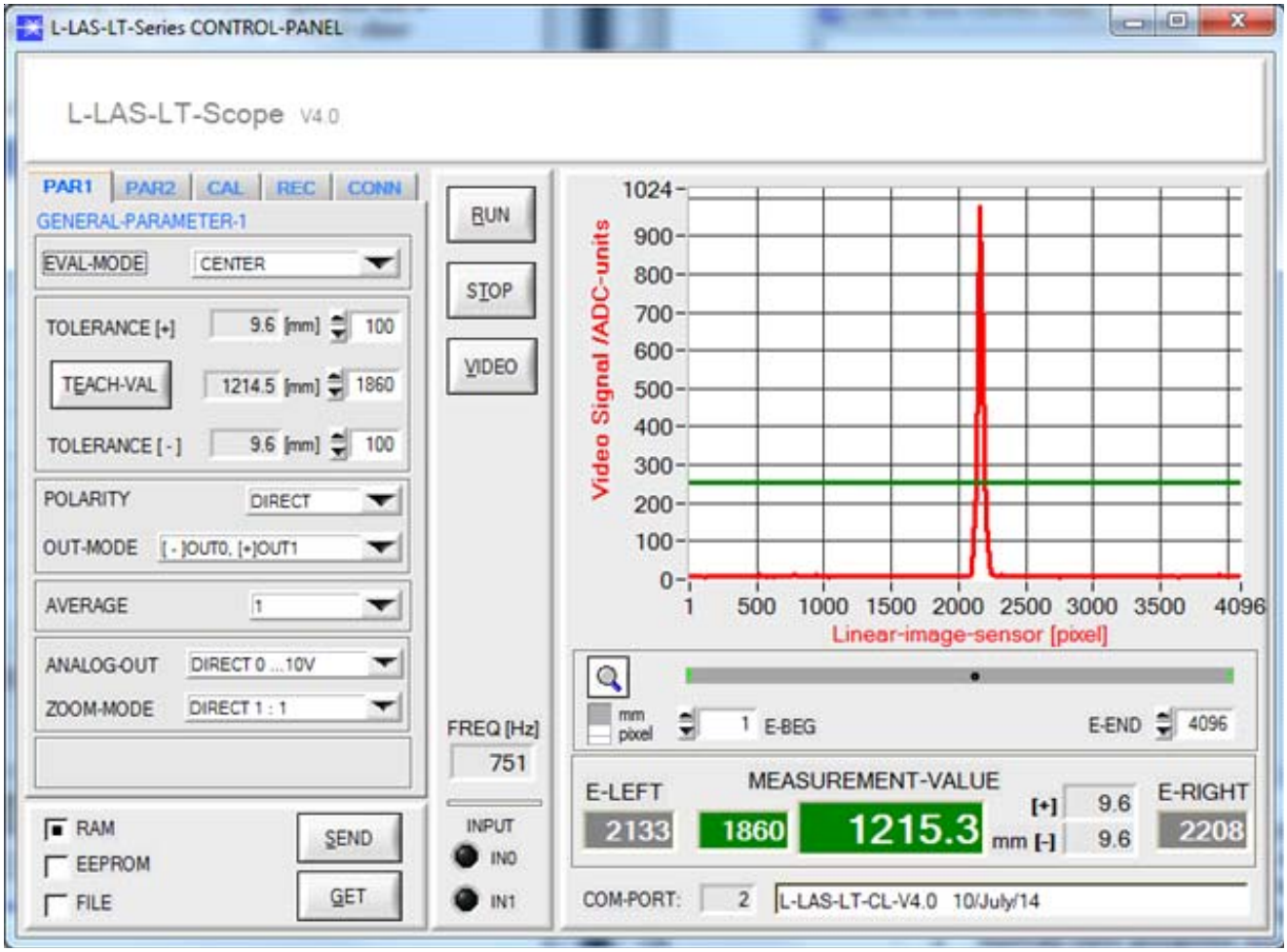

With the help of the L-LAS-LT-Scope software the following settings can be made at the sensor:

- Setting of laser power and type of automatic power correction
- Polarity of digital outputs
- Different evaluation modes
- Start of the teach process by software button
- Setting of tolerance ranges for monitoring the measured value

Furthermore, various numerical and graphical measured quantities can be visualized with the L-LAS-LT-Scope software. For example, the raw data of the CCD line sensor can be displayed graphically and numerically.