RED Series

RED-55-P
RED-55-L

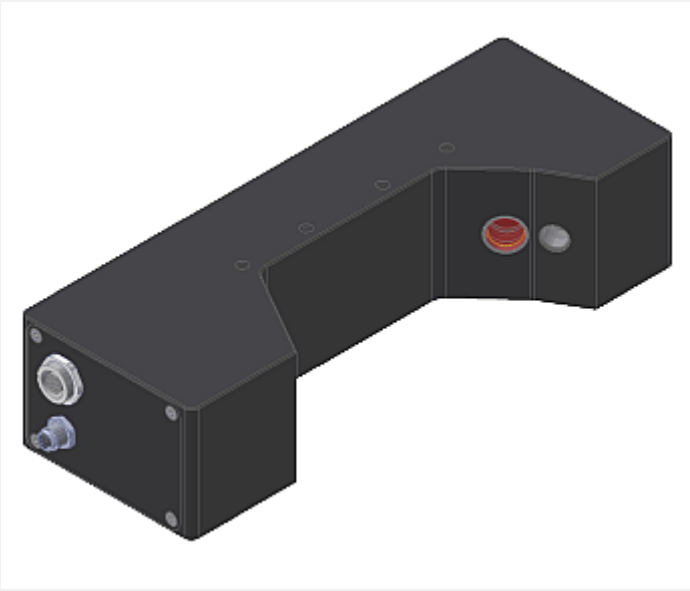

- Line laser, **Laser class 2** ($P_{opt.}$ <1 mW, wavelength 670 nm)
  Type -P: Visible red laser spot, typ. Ø 0.1 mm in the focus
  Type -L: Visible red laser line, typ. 0.1 mm x 3 mm in the focus
- Reference distance 55 mm
- Working range typ. 50 mm ... 61 mm
- Automatic adjustment to the product
- Extern trigger mode
- Proof edge detection even with changing surface quality (glossy/matt, dark/bright)
- Max. scan frequency 85 kHz
- Insensitive to outside light (interference filter, pulsed laser light)
- RS232 interface (USB or Ethernet converter available)
- Windows® user interface
- 2 digital inputs (IN0, IN1)
- 3 digital outputs (OUT0, OUT1, OUT2), switching frequency max. 60 kHz
- 1 analog output (0V ... +10V or 4 mA ... 20 mA)
- Switching state indication via 3 LEDs (OUT0, OUT1, OUT2)

Design

Product name:

RED-55-P
RED-55-L
(incl. Windows® PC software RED-Scope)

P = Focused laser spot (punctiform)
L = Focused laser line

Accessories: (cf. page 9)

Beamstop-RED-55-110

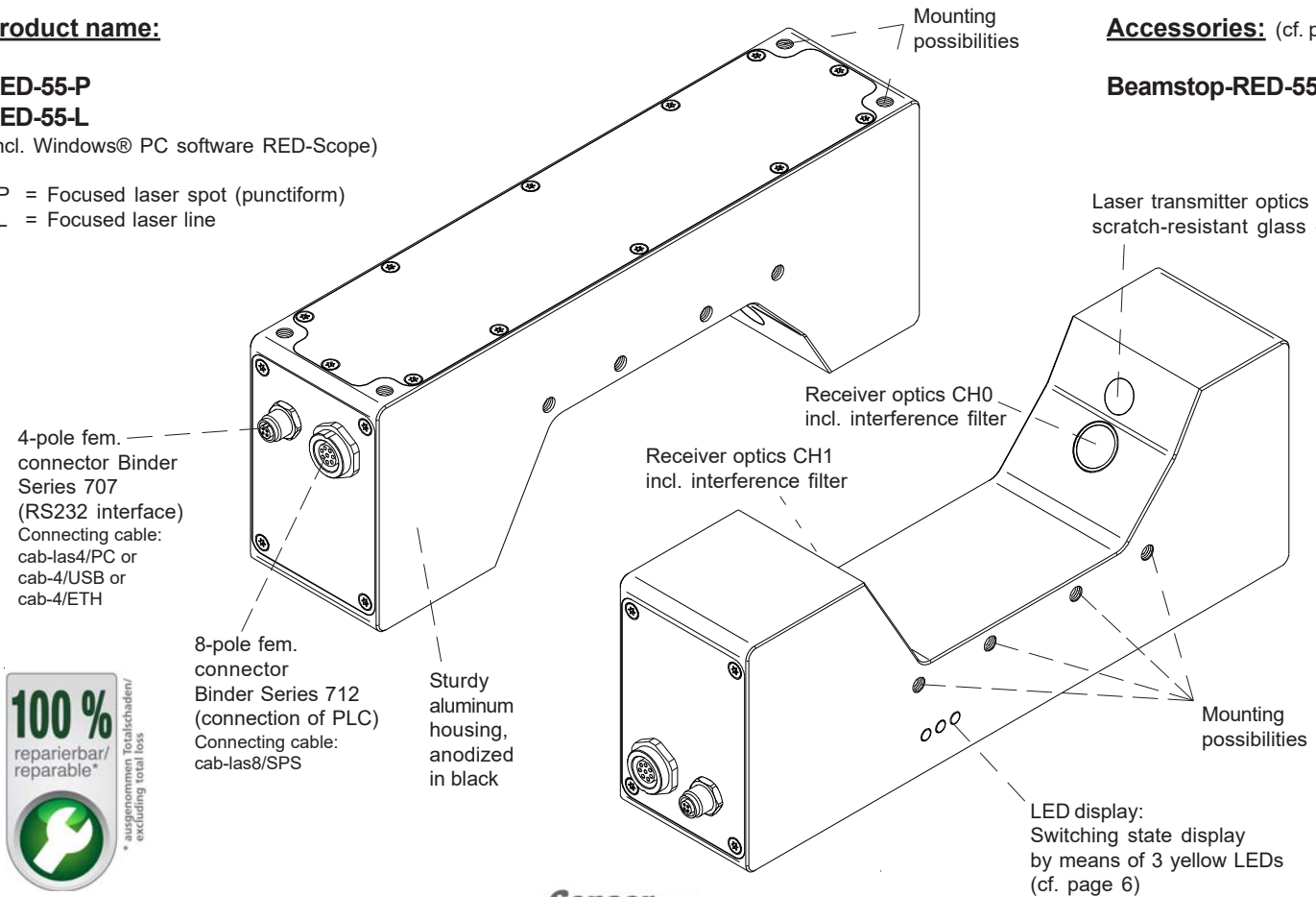

100 % reparierbar/ reparable* * ausgenommen Totalschaden/ excluding total loss

Technical Data

Model	RED-55-P	RED-55-L
Voltage supply	+24VDC (± 10%), reversed polarity protected, overload protected	
Current consuption	< 220 mA	
Max. switching current	100 mA, short-circuit proof	
Transmitter (light source)	semi-conductor laser, 670 nm, AC operation, 1 mW max. opt. power, laser class 2 acc. to DIN EN 60825-1. The use of this laser sensor therefore requires no additional protective measures.	
Transmitter control	can be switched via PC software: AC operation (LED MODE-AC) or DC operation (LED MODE-DC)	
Reference distance	55 mm	
Laser line geometry	focused laser spot (punctiform): typ. Ø 0.1 mm	focused laser line: typ. 0.1 mm x 3 mm
Working range	typ. 50 mm ... 61 mm	
Scan frequency	LED mode AC (depends on parameterization): Frequency [Hz] Digital outputs Analog output Max. 50 000 Off Off Max. 46 600 On Off Max. 42 800 Off On Max. 40 000 On On Measurements were made with the smallest gain at the receiver (AMP1). At the highest gain (AMP8), the frequency is reduced by a factor of 10.	LED mode DC (depends on parameterization): Frequency [Hz] Digital outputs Analog output Max. 116 500 Off Off Max 92 000 On Off Max. 82 500 Off On Max. 69 000 On On The frequency is independent of the gain set at the receiver.
Switching frequency	max. 60 kHz	
Min. height of edge	typ. 0.02 mm	
Digital inputs (2x)	IN0, IN1 (pin 3, pin 4): digital (0V/+24V)	
Digital outputs (3x)	OUT0, OUT1, OUT2 (pin 5, pin 6, pin 7): digital (0V/+Ub), bright-/dark-switching, can be adjusted under Windows® on PC	
Analog output (1x)	0V ... +10V or 4 mA ... 20mA (pin 8)	
Band width analog signal	typ. 90 kHz (-3dB)	
Laser power correction	adjustable under Windows® on PC	
Sensitivity setting	adjustable under Windows® on PC	
Receiver	photo diode	
Optical filter	2x interference fiilter for CH0 and CH1	
Ambient light	max. 5000 Lux	
Deadtime	dynamic, adjustable under Windows® on PC	
Pulse lengthening	0 ... 100 ms, adjustable under Windows® on PC	
Averaging	max. 32768 values, adjustable under Windows® on PC	
Switching state indication	3 yellow LEDs visualize the physical state of the outputs OUT0, OUT1, and OUT2	
Housing dimensions	LxWxH approx. 190 mm x 45 mm x 68 mm (without connector flanges)	
Housing material	aluminum, anodized in black	
Enclosure rating	IP54	
Type of connector	connection to PLC: 8-pole fem. connector (Binder 712) connection to PC: 4-pole fem. connector (Binder 707)	
Connecting cables	to PLC: cab-las8/SPS or cab-las8/SPS-w to PC/RS232 interface: cab-las4/PC or cab-las4/PC-w to PC/USB interface: cab-4/USB or cab-4/USB-w to PC/Ethernet interface: cab-4/ETH	
Operating temp. range	-20°C ... +50°C	
Storage temperature range	-20°C ... +85°C	
Interface	RS232, parameterisable under Windows®	
EMC test acc. to	DIN EN 60947-5-2 CE	

Dimensions

RED-55-P
RED-55-L

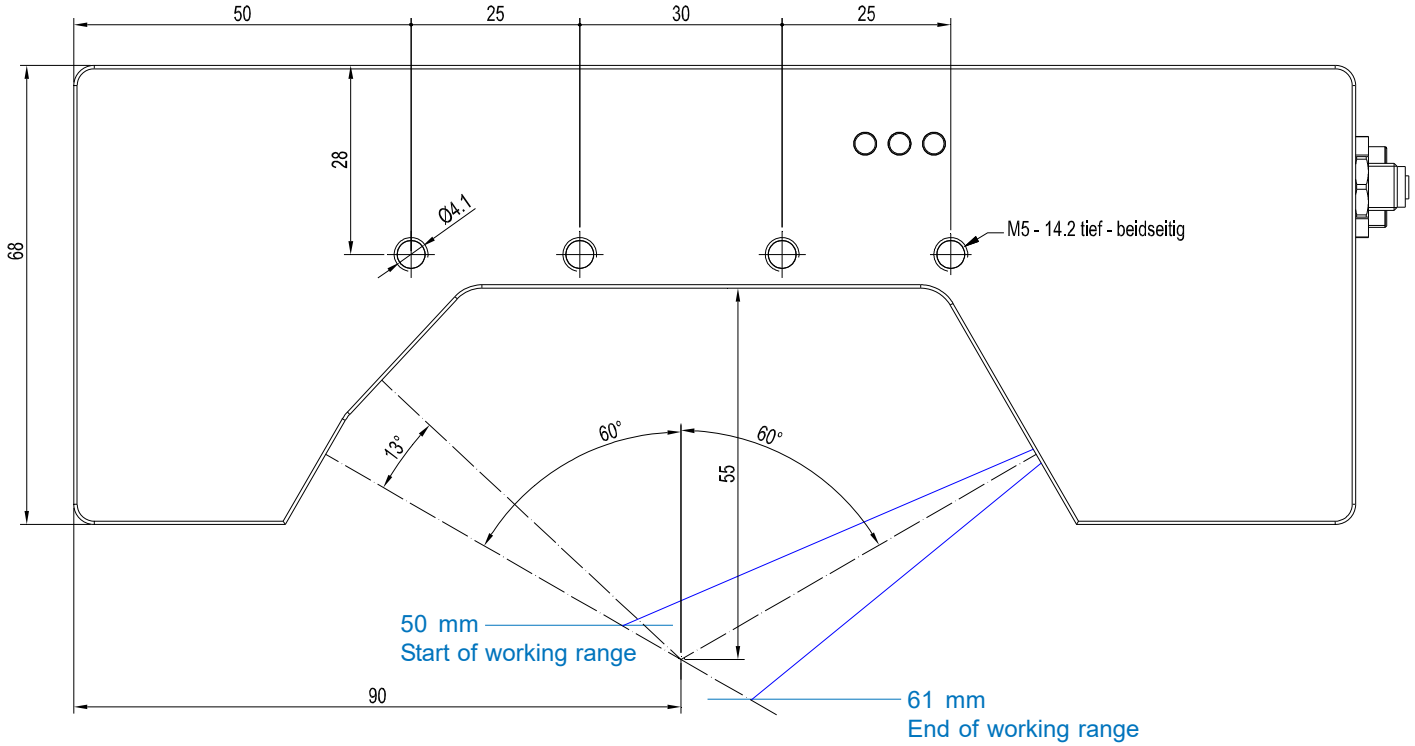

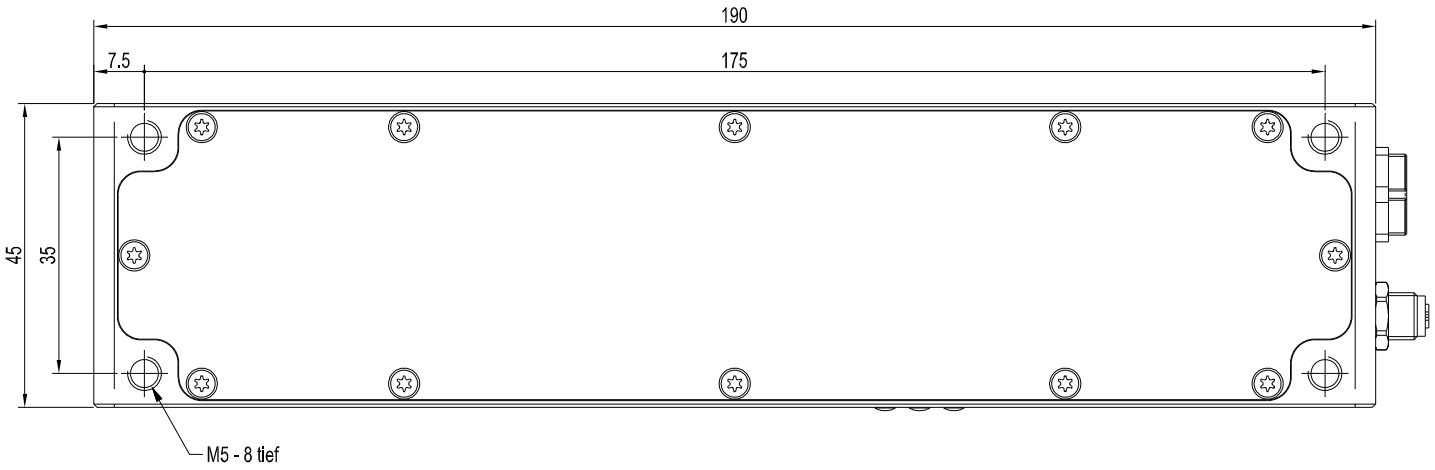

All dimensions in mm

Connector Assignment

Connection to PLC:
8-pole fem. connector Binder Series 712

Pin:	Color:	Assignment:
1	white	GND (0V)
2	brown	+24VDC (± 10%)
3	green	IN0 (Digital 0: 0 … 1V, Digital 1: +Ub - 10%)
4	yellow	IN1 (Digital 0: 0 … 1V, Digital 1: +Ub - 10%)
5	grey	OUT0 (Digital 0: 0 … 1V, Digital 1: +Ub - 10%)
6	pink or black	OUT1 (Digital 0: 0 … 1V, Digital 1: +Ub - 10%)
7	blue	OUT2 (Digital 0: 0 … 1V, Digital 1: +Ub - 10%)
8	red	ANALOG (0V...+10V or 4mA...20mA)

Connecting cable:
cab-las8/SPS-(length)
cab-las8/SPS-w-(length) (angle type, 90°)
(standard length 2m)

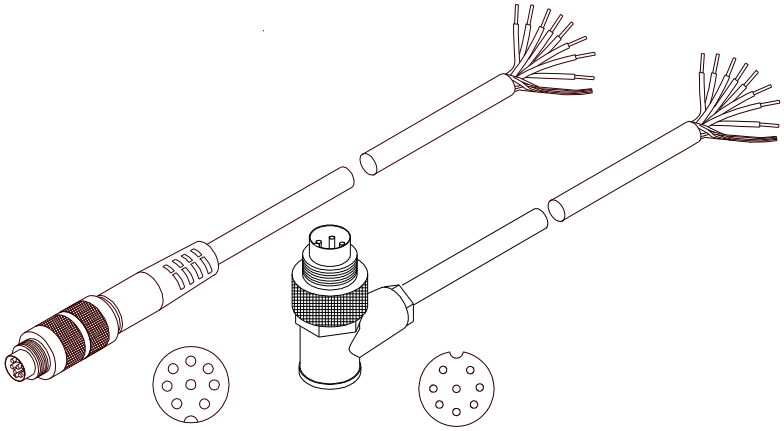

cab-las8/SPS-...
(max. length 25m, outer jacket: PUR)

cab-las8/SPS-w-...
(max. length 25m, outer jacket: PUR)

Connection to PC:
4-pole fem. connector Binder Series 707

Pin:	Assignment:
1	+24VDC (+Ub, OUT)
2	GND (0V)
3	RxD
4	TxD

Connection via RS232 interface at the PC:
Connecting cable:
cab-las4/PC-(length)
cab-las4/PC-w-(length) (angle type 90°)
(standard length 2m)

alternative:
Connection via USB interface at the PC:
USB converter (incl. driver software):
cab-4/USB-(length)
cab-4/USB-w-(length) (angle type 90°)
(standard length 2m)

alternative:
Connection to local network via Ethernet bus:
Ethernet converter (incl. software „SensorFinder“):
cab-4/ETH-500
(standard length 0.5m)

Optional: External CAT5 cable, e.g.
cab-eth/M12D-RJ45-flx-(length)

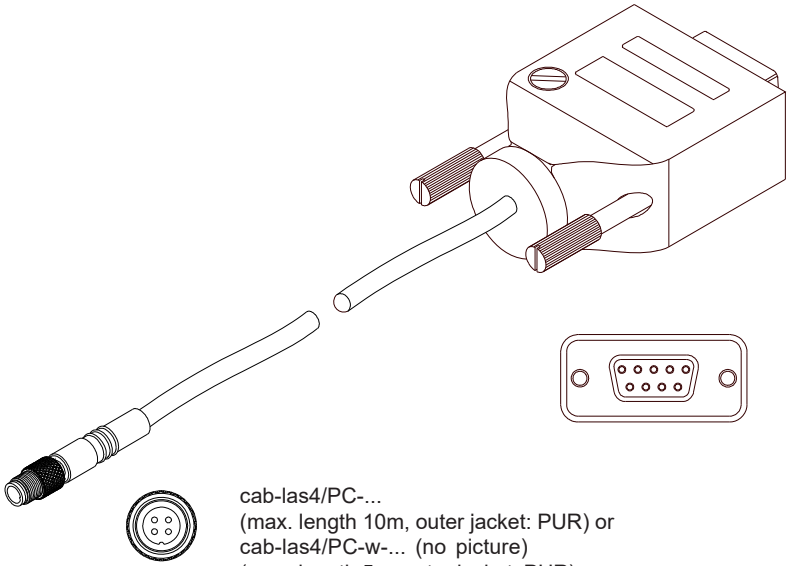

cab-las4/PC-...
(max. length 10m, outer jacket: PUR) or
cab-las4/PC-w-... (no picture)
(max. length 5m, outer jacket: PUR)

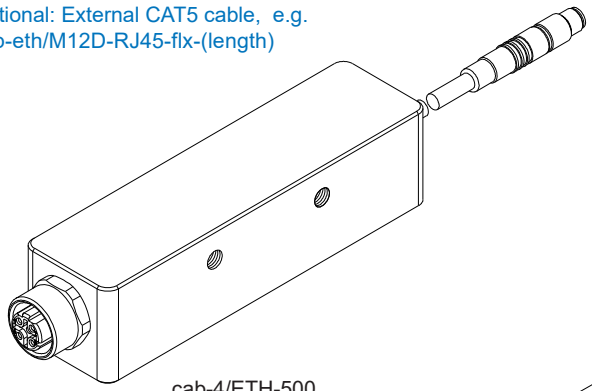

cab-4/ETH-500
(length 0.5m, outer jacket: PUR)
4-pole M12 fem. conn. (D-coded)
for connection of an external
CAT5 cable, e.g.
cab-eth/M12D-RJ45-flx-(length)

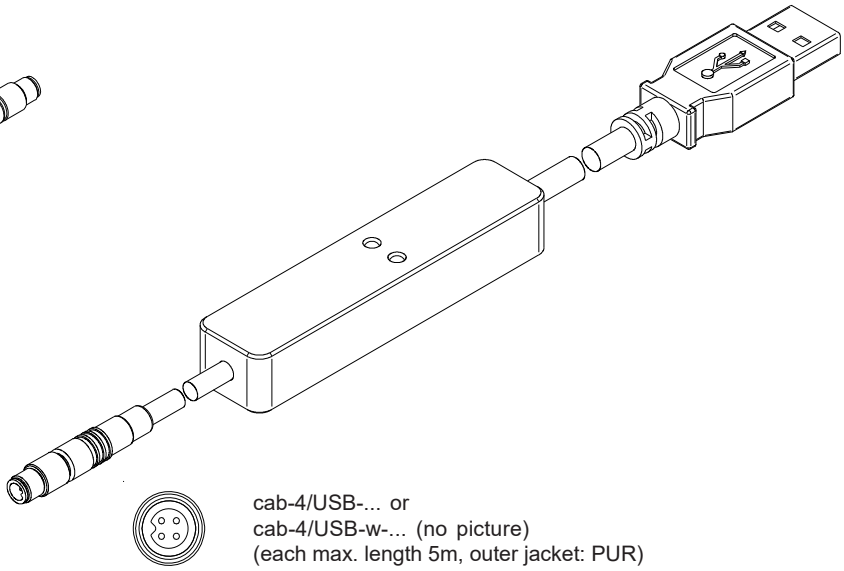

cab-4/USB-... or
cab-4/USB-w-... (no picture)
(each max. length 5m, outer jacket: PUR)

Function Principle

The edge detectors of RED series primarily are designed for detecting and counting edges. These may be e.g. newspapers, single sheets, cardboard boxes, sheet metals, wires, lamellas, welds, rotor blades, etc. In its optimum operating range (e.g. 110 mm when RED-110-…) sheet edges starting from 0.05 mm are reliably detected.

The sensor is characterised by a high scanning frequency and by its ability to automatically adjust itself to differently bright and dark, as well as slow and fast objects; with a minimally set output pulse length (adjustable via software) it reaches a switching frequency of 60 kHz. Furthermore the sensor can be used for almost all conceivable applications by selecting optimised software algorithms.

The RED sensor allows highly flexible signal acquisition. The sensor, for example, can be operated in alternating-light mode (AC mode), which means the sensor is not influenced by external light, or in constant-light mode (DC mode), which provides outstanding high-speed sensor operation. With the stepless adjustment of the integrated light source, the selectable gain of the receiver signal, and an INTEGRAL function the sensor can be adjusted to almost any surface.

A micro-controller performs 12-bit analog/digital conversion of the analog signal, which allows recording and evaluation of the signal. Furthermore the RED sensor offers various options for intelligent signal processing such as e.g. dirt accumulation compensation.

Parameters and measurement values can be exchanged between PC and sensor either through RS232 or Ethernet (using an Ethernet converter). Through the interface all the parameters can be stored in the non-volatile EEPROM of the sensor.

The PC software facilitates the parameterisation, diagnostics, and adjustment of the sensor system (oscilloscope function). The software furthermore provides a data recorder function that automatically records data and stores them on the hard disk of the PC.

Function principle of the RED-... sensor:

The laser sensors of RED series comprise a laser transmitter (laser diode, l=670 nm) and two receivers. As shown in the picture below, the laser beam is focused at an angle onto the edge (of the magazine) opposite to the direction of feed. When an edge arrives, it blocks the beam path to receiver CH1, whereas the signal at receiver CH0 slightly increases due to the more favourable angle of impingement! The standardised value of SIGNALS CH0 and CH1 is used as the starting signal SIG for all the further algorithms of the sensor.

- The evaluated signal can be output via a voltage output or via a current output. With the help of the software, different evaluation modes for the analogue signal can be selected.
- The state of the output signal is output via 2 digital outputs depending on the evaluation mode.
- A digital input allows external „teaching“ of the sensor.
- Another input enables a „freezing“ of the analog output signal with a positive signal edge.

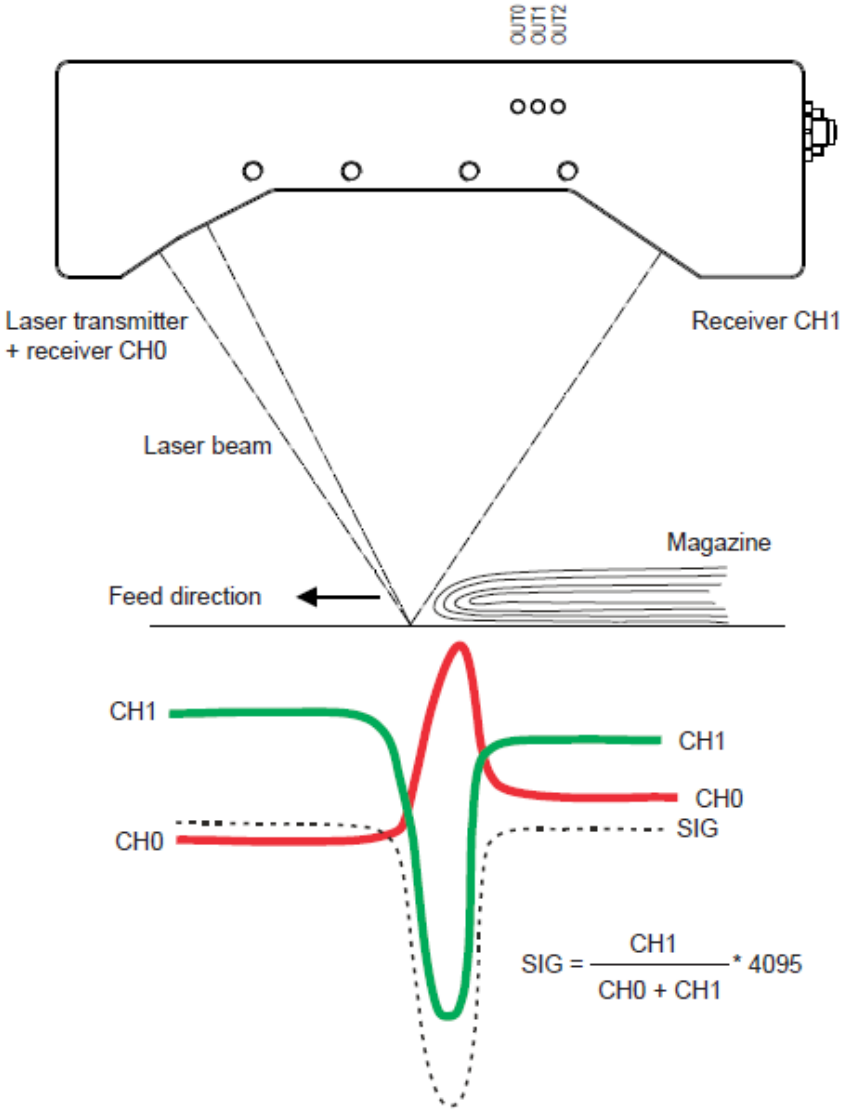

LED Display

LED display:

By means of the two LEDs the physical state of the two outputs OUT0, OUT1 and OUT2 is visualized.

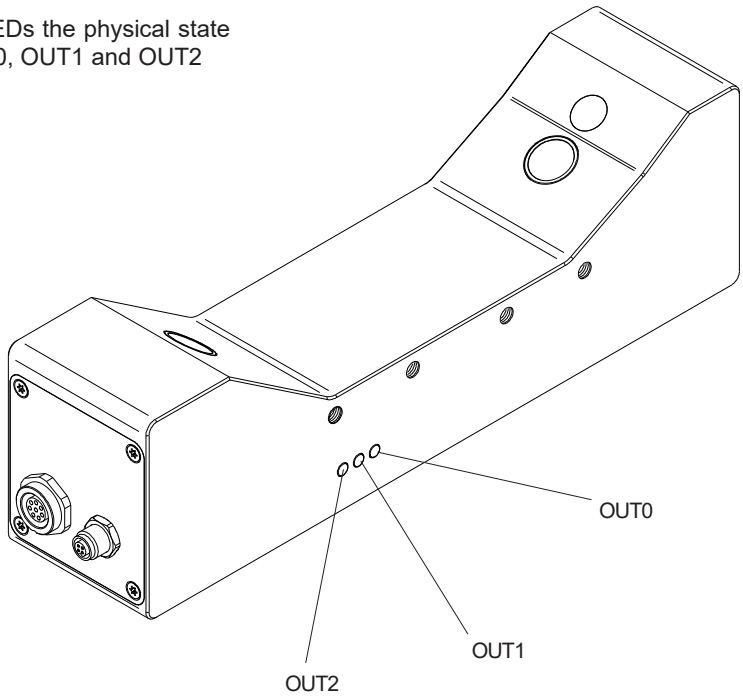

Laser Warning

The laser edge detectors RED-55-... comply with laser class 2 according to EN 60825-1. The use of these laser transmitters therefore requires no additional protective measures.

The laser edge detectors RED-55-... are supplied with a laser warning label.





Parameterization

Windows® user interface:

(The current software version is available for download on our website.)

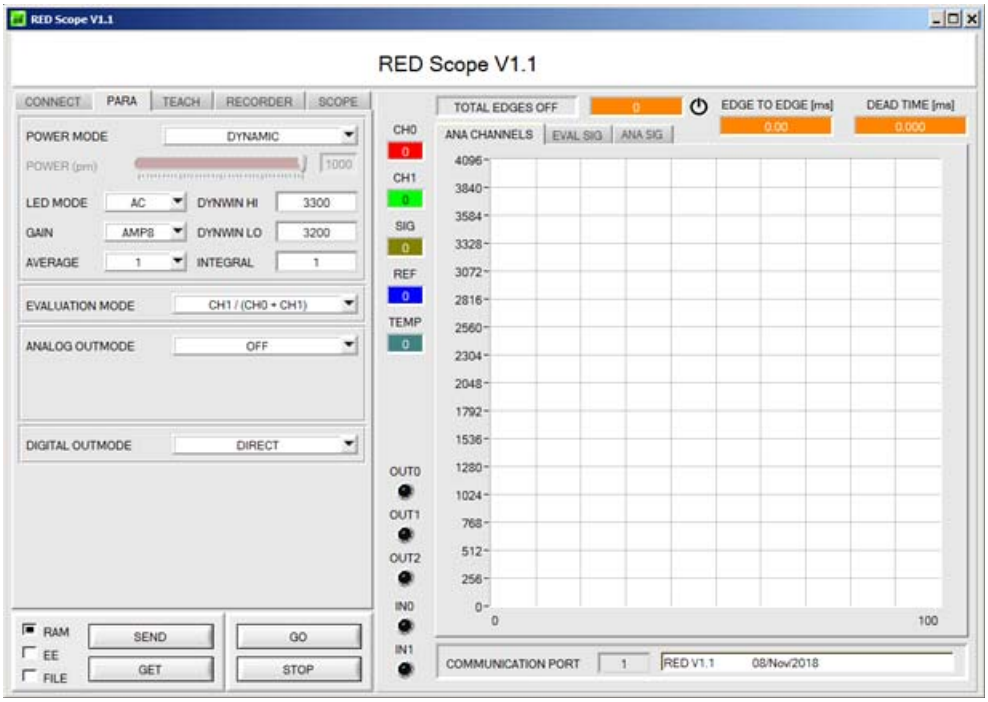

The PC software RED-Scope facilitates the parameterization, the diagnosis, and the adjustment of the sensor system (oscilloscope function). Moreover, the software features a data recorder function that allows the automatic recording of recorded data and the saving of those at the hard disk of the PC.

Parameters and measurement values can be exchanged between PC and sensor either through RS232 or Ethernet (using an Ethernet converter). Through the interface all the parameters can be stored in the non-volatile EEPROM of the sensor.



The SCOPE tab visualises an oscilloscope.

Firmware Update

Firmware update by means of the software „FirmwareLoader“:

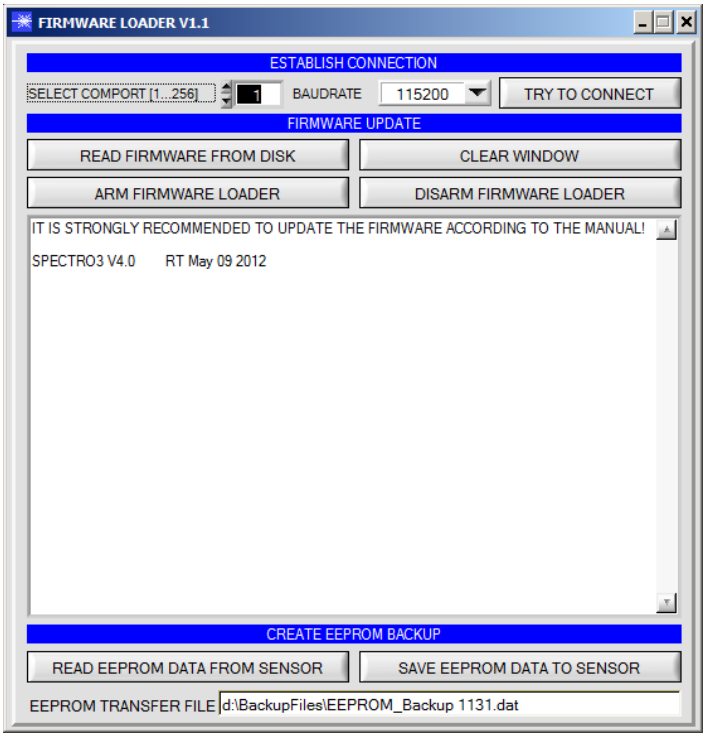

The software „Firmware Loader“ allows the user to perform an automatic firmware update. The update will be carried out through the RS232 interface.

An initialisation file (xxx.ini) and a firmware file (xxx.elf.S) are required for performing a firmware update. These files can be obtained from your supplier. In some cases an additional firmware file for the program memory (xxx.elf.p.S) is also needed, and this file will be automatically provided together with the other two files.

Accessories

Beamstop-RED-55-110:
(please order separately)

Optional beam stop to comply with U.S. FDA regulations for laser class 2 products.
Required for import of the RED sensor to the U.S., to block the laser beam mechanically in cases of an emergency.

Suitable for:
RED-55-P
RED-55-L
RED-110-P
RED-110-L
RED-110-P-F60
RED-110-L-F60
RED-110-XL-P
RED-110-XL-L

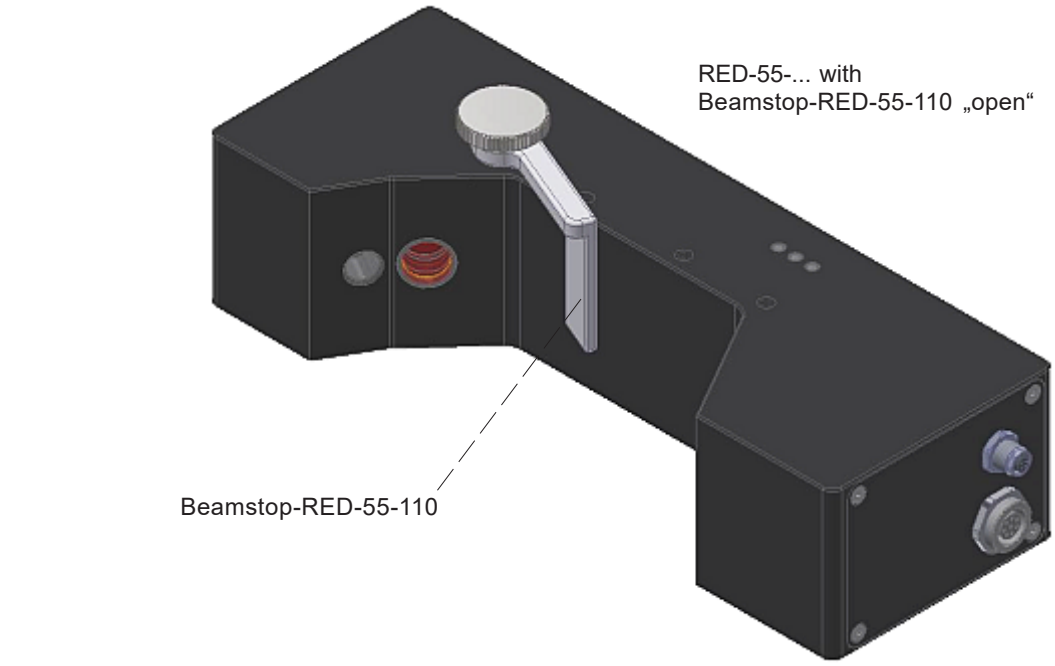

RED-55-... with
Beamstop-RED-55-110 „open“

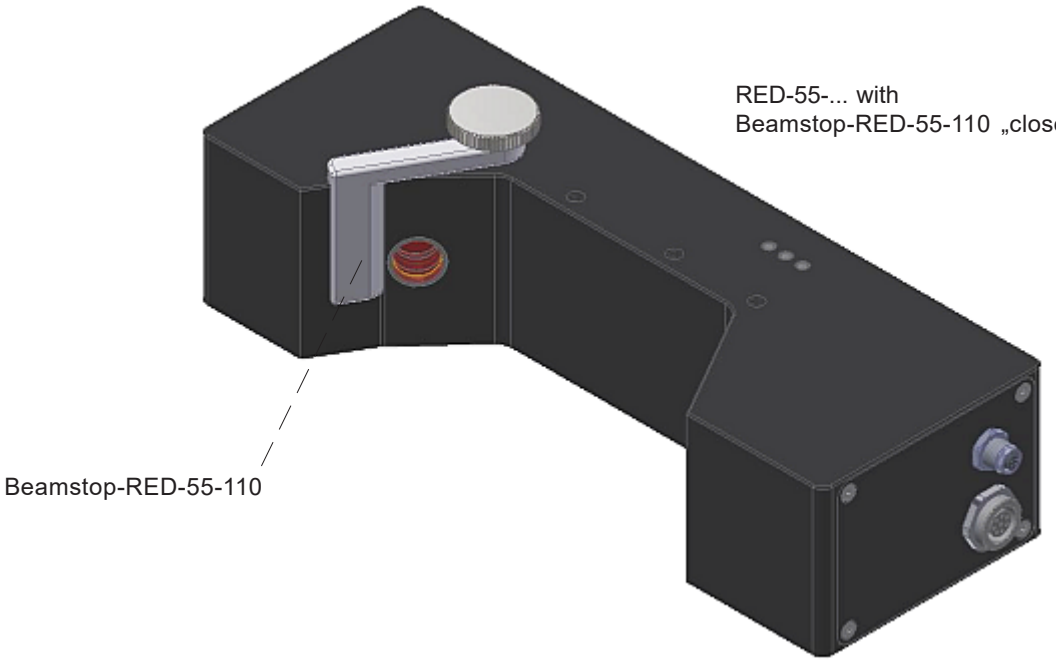

RED-55-... with
Beamstop-RED-55-110 „closed“