FLB Series

FLB-CON8-AC **Electronic Control Unit**
FLB-CON8-DC **Electronic Control Unit**



- Suitable for FLB-F, FLB-H, FLB-V sensors (FLB Series) as well as for FKB-...-P and SLB-...-P sensors (TLB Series)
- Detection of smalles objects (starting from 50 µm)
- External teach input
- Switching frequency typ. 30 kHz
- Scan frequency typ. 200 kHz
- 1x digital output, 1x analog output (0V ... +10V)
- Adjustment of sensitivity and pulse length via software
- Threshold correction can be activated via software
- Bright or dark switching can be activated via software
- Parameterizable under Windows®
- RS232 interface

Design

Product name:

FLB-CON8-AC (pulsating light operation)
FLB-CON8-DC (direct light operation)
(incl. Windows® PC software FLB-TLB-CON8-Scope)

Suitable for the connection of sensor frontends of type:

FLB-F-...
FLB-H-...
FLB-V-...
FKB-...-P
SLB-...-P

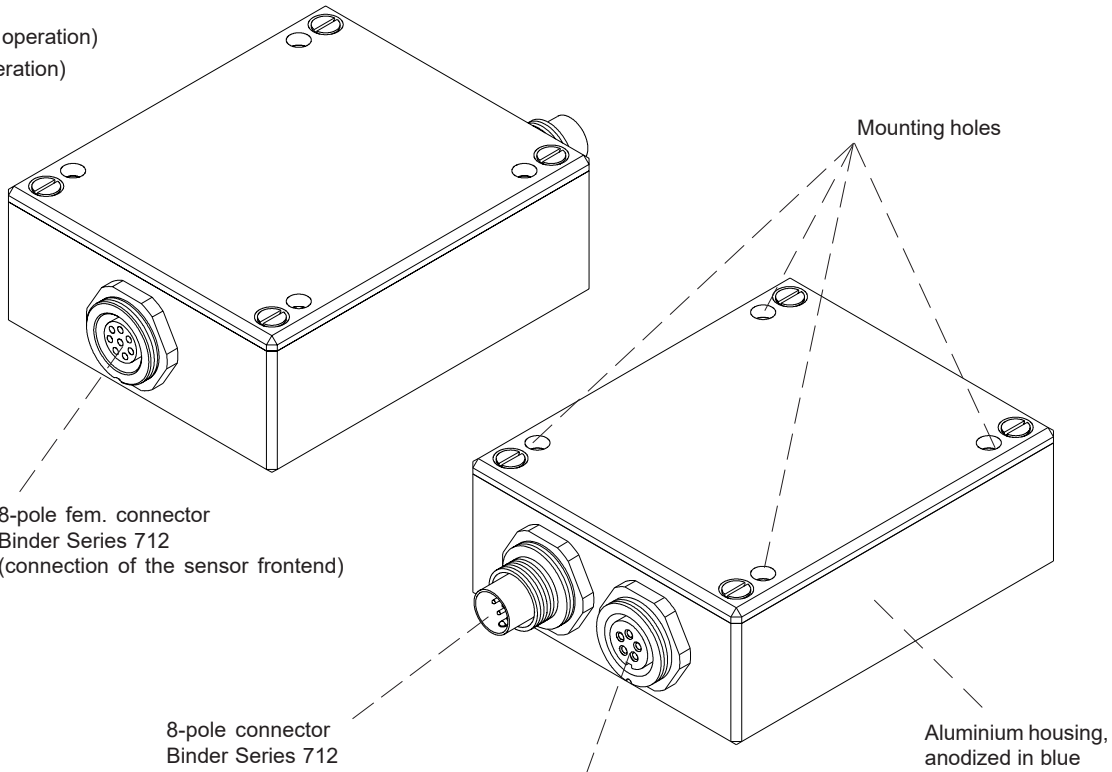

100 % reparierbar/ reparable*
* ausgenommen Totalschaden/ excluding total loss

Technical Data

Model	FLB-CON8-AC	FLB-CON8-DC
Operation	Pulsating light operation	Constant light operation
Voltage supply	+24VDC ± 10%, reversed polarity protected, overload protected	
Current consumption	With sensor: typ. 80 mA	
Suitable sensor frontends	FLB-F-..., FLB-H-..., FLB-V-...	
Operating temperature range	-20°C ... +60°C	
Storage temperature range	-20°C ... +85°C	
Housing material	Aluminum, anodized in blue	
Housing dimensions	LxWxH approx. 60 mm x 50 mm x 22 mm	
Enclosure rating	IP 64	
Input (1x)	Switching input (+24V/0V): External teach input	
Digital output (1x)	OUT0 (Digital 0: typ. 0 ... 1V, Digital 1: typ. +Ub - 10%)	
Analog output (1x)	0V ... +10V	
Interface	RS232, parameterizable under Windows®	
Pulse lengthening	Parameterizable under Windows®	
Sensitivity setting	Parameterizable under Windows®	
Type of connector	Connection to PLC: 8-pole connector Binder Series 712 Connection to PC: 5-pole fem. connector Binder Series 712 Connection to sensor frontend: 8-pole fem. connector Binder Series 712	
Connecting cable	Connection to PC: cab-las5/PC or cab-5/USB or cab-5/ETH Connection to PLC: cab-las8/702-fem	
Switching frequency	typ. 30 kHz	
Scan frequency	typ. 200 kHz	
Max. switching current	200 mA, short-circuit protected	
EMC test acc. to	DIN EN 60947-5-2 CE	

Dimensions

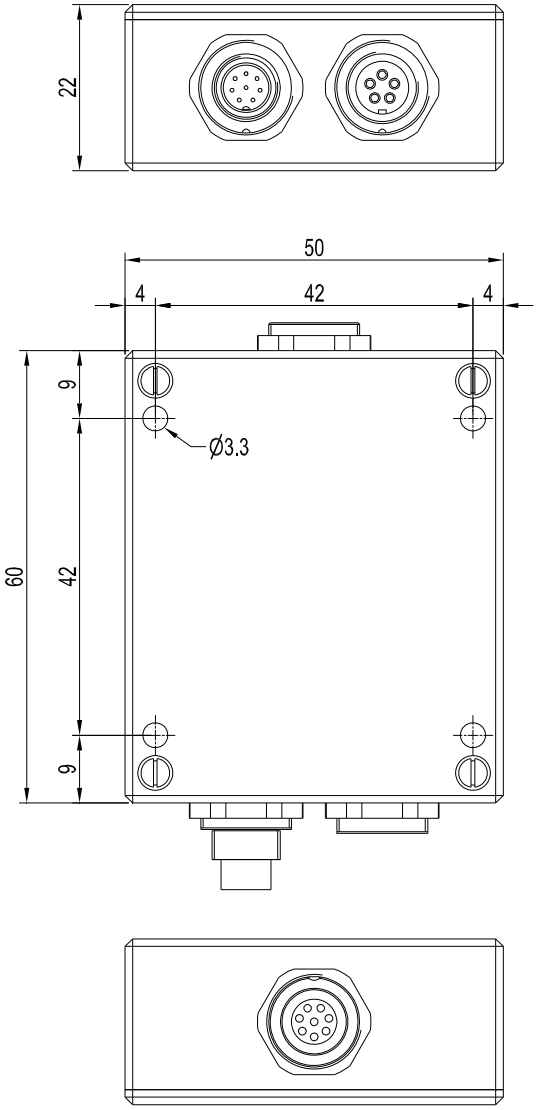

(All dimensions in mm)

Connecting Diagram

For connection to electronic control unit FLB-CON8-..., the following sensor frontends are suitable:

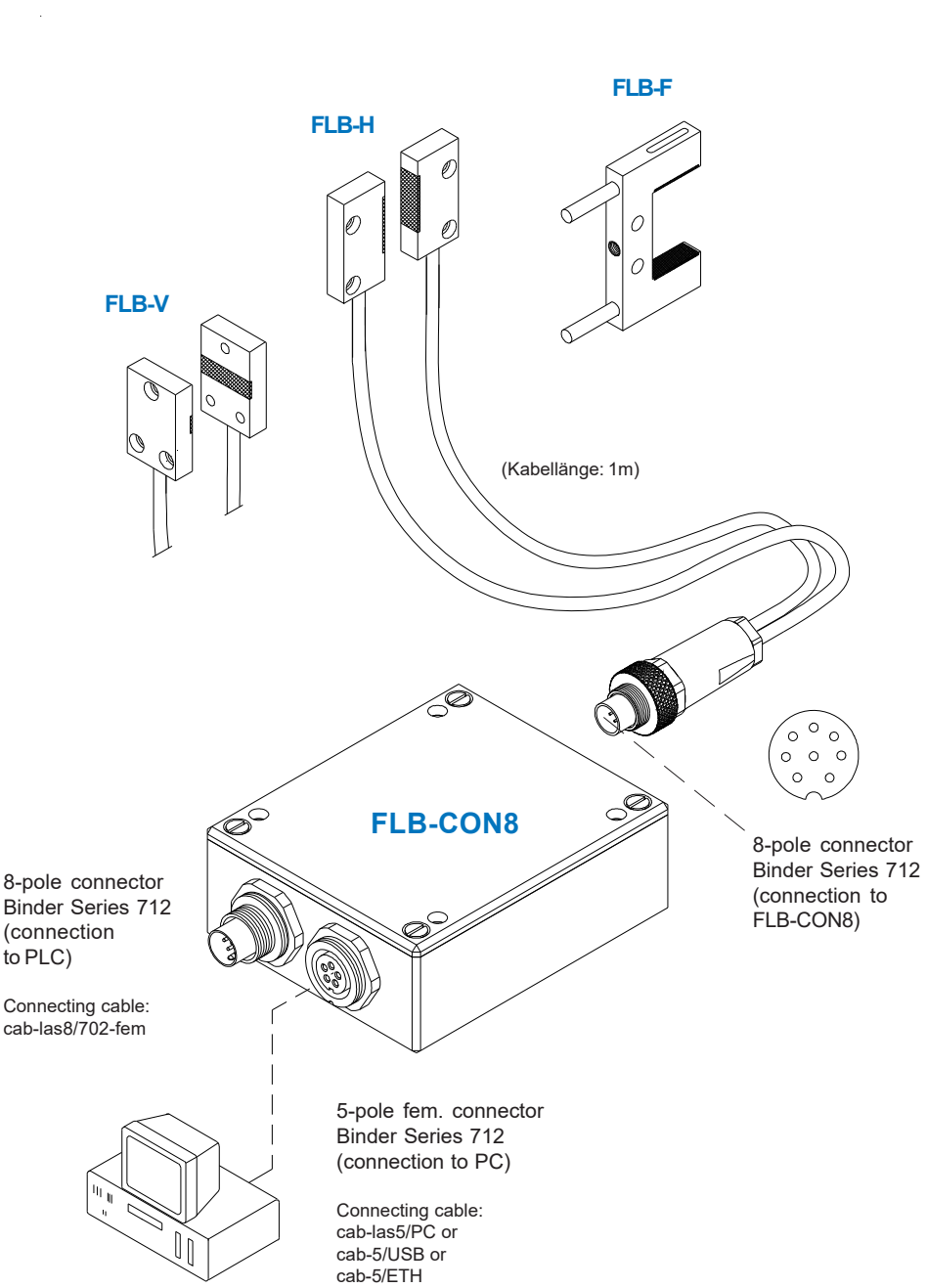

FKB-06-...-P

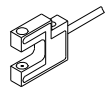

FKB-06-...-BL-P

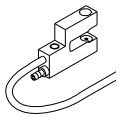

FKB-08-...-P

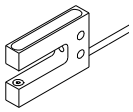

FKB-08-...-BL-P

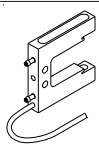

SLB-01-P

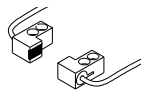

SLB-02-P

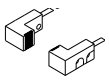

SLB-03-P

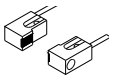

SLB-04-P



SLB-05-P

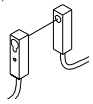

SLB-06-P

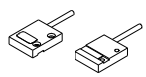

SLB-08-P

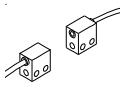

Connector Assignment

Connection FLB-CON8-... to PLC:
8-pole connector Binder Series 712

Pin:	(wire of cable)	Assignment:
1	(white)	GND (0V)
2	(brown)	+Ub (+24VDC ± 10%)
3	(green)	IN0
4	(yellow)	OUT0 (Digital 0: typ. 0 ... 1V, Digital 1: typ. +Ub - 10%)
5	(grey)	not connected
6	(pink or black)	ANALOG (0V ... +10V)
7	(blue)	not connected
8	(red)	not connected

Connecting cable:
cab-las8/SPS-fem-(length) or
cab-las8/SPS-fem-w-(length) (angle type 90°)
(standard length 2m, available up to length 25m)

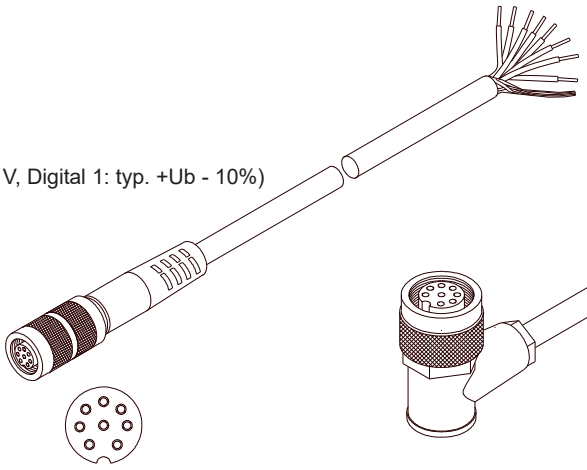

cab-las8/702-fem-...
(max. length 25m, outer jacket: PUR)

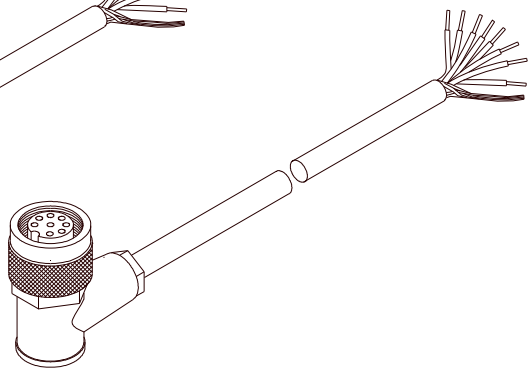

cab-las8/702-fem-w-...
(max. length 25m, outer jacket: PUR)

Connection SI-CON8-FIO to PC:
5-pole fem. connector Binder Series 712

Pin:	Assignment:
1	0V (GND)
2	TxD
3	RxD
4	+24VDC (+Ub, OUT)
5	not connected

Connecting cable:
cab-las5/PC-(*length*) or
cab-las5/PC-w-(*length*) (angle type 90°)
(standard length 2m, also available: length 5m)

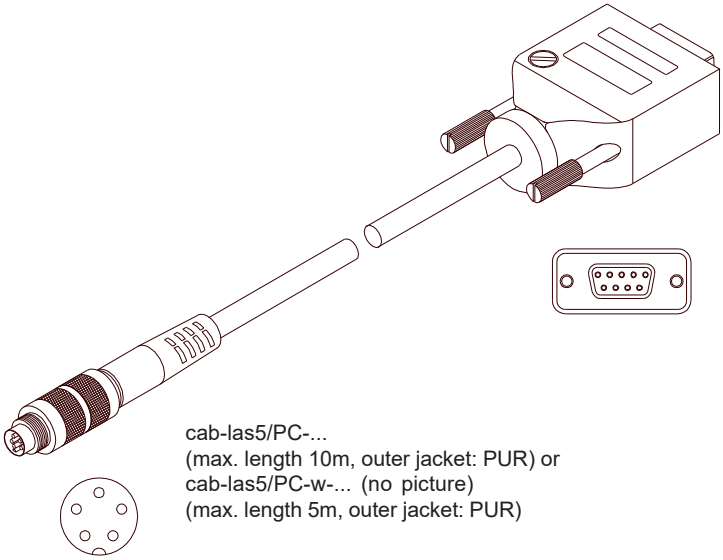

cab-las5/PC-...
(max. length 10m, outer jacket: PUR) or
cab-las5/PC-w-... (no picture)
(max. length 5m, outer jacket: PUR)

alternative:
Connection via USB-interface at PC:
Connecting cable (incl. driver software):
cab-5/USB-(*length*) or
cab-5/USB-w-(*length*) (angle type 90°)
(standard length 2m, also available: length 0.5m, 1m)

alternative:
Connection to local network via Ethernet bus:
Adapter (incl. software „SensorFinder“):
cab-4/ETH-500
(standard length 0.5m)

Optional: External CAT5 cable, e.g.
cab-eth/M12D-RJ45-flx-(length)

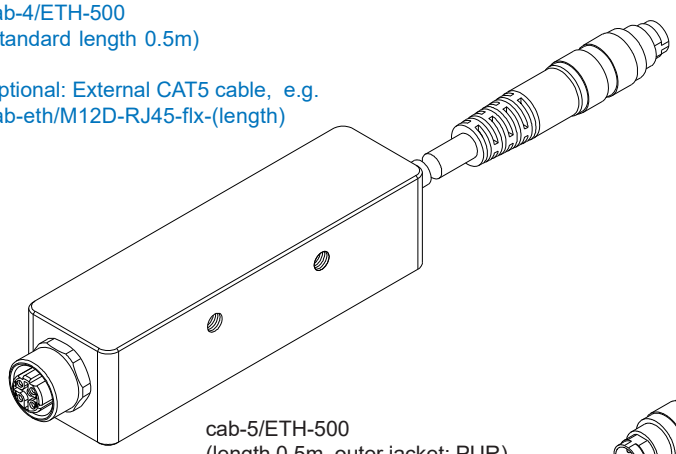

cab-5/ETH-500
(length 0.5m, outer jacket: PUR)
4-pole M12 fem. conn. (D-coded)
for connection of an external
CAT5 cable, e.g.
cab-eth/M12D-RJ45-flx-(length)

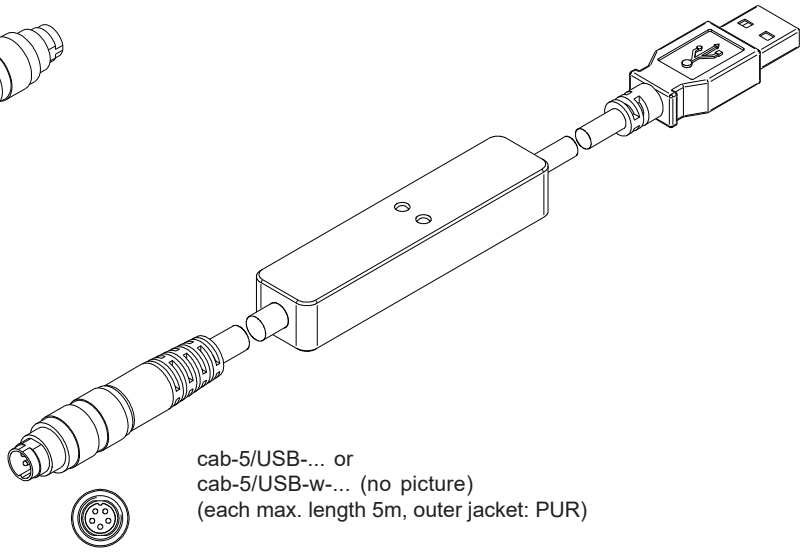

cab-5/USB-... or
cab-5/USB-w-... (no picture)
(each max. length 5m, outer jacket: PUR)

Schematic Sketch

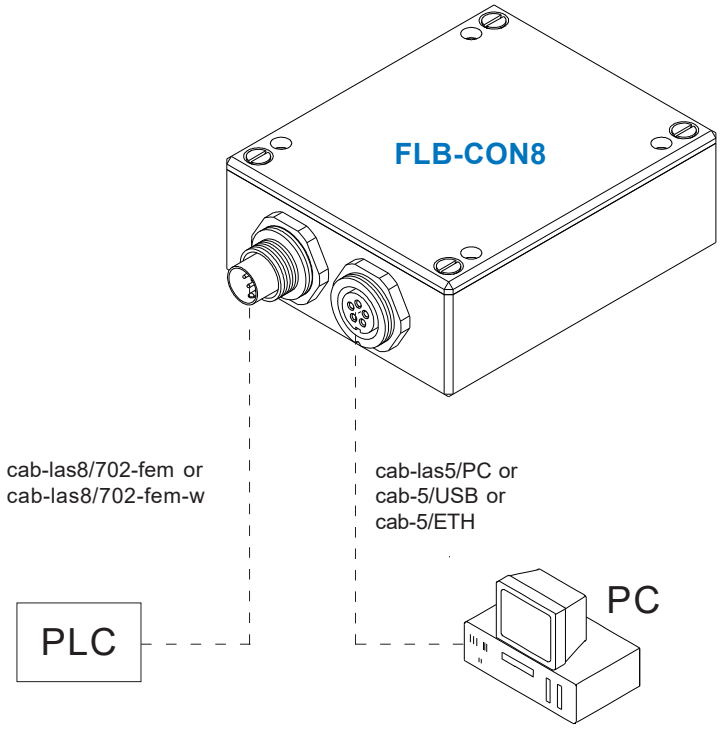

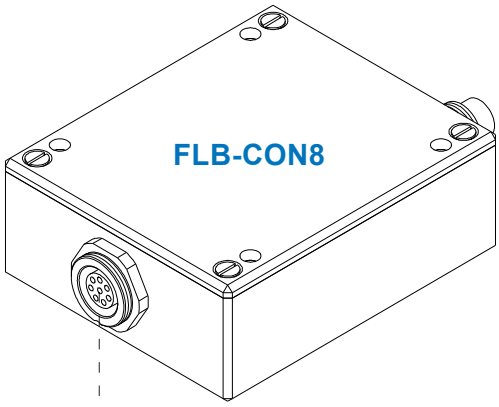

Direct connection of the
sensor frontend to FLB-CON8-...
(there is no additional cable necessary)

Connection FLB-CON8-... to sensor frontend
8-pole fem. connector Binder Series 712

Connector assignment:
Cf. data sheets of the various sensor frontends

FLB-F-...
FLB-H-...
FLB-V-...

Windows® Software

Windows® software FLB-TLB-CON8-Scope:

The FLB-CON8 electronic control unit can be easily parameterised with the Windows® user interface.
For this purpose the sensor is connected to the PC with the serial interface cable cab-las5/PC (or with USB cable cab-las5/USB).
When parameterisation is finished, the PC can be disconnected again.

Windows® user interface:

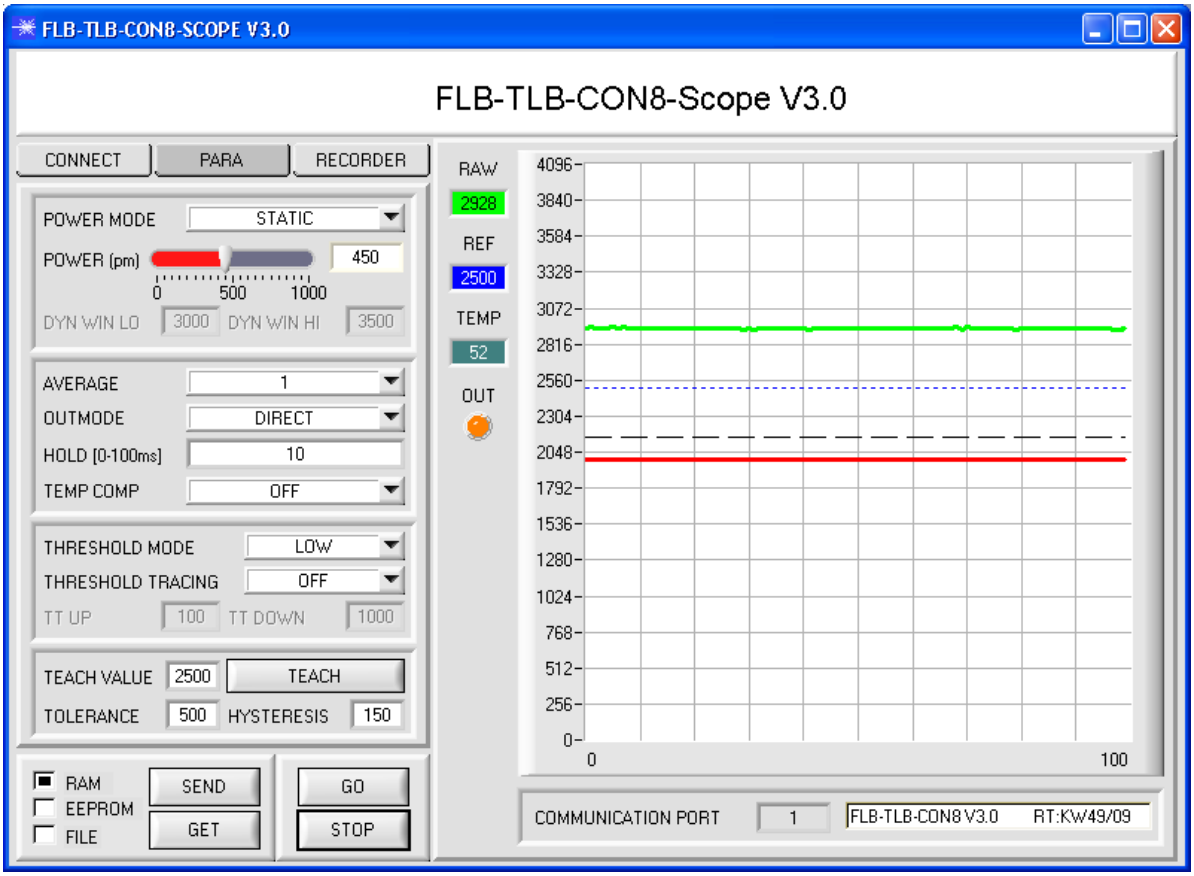

The products FLB-F, FLB-H, and FLB-V of the FLB Series respectively the products FKB-…-P and SLB-…-P of the TLB Series can be connected to the electronic control unit FLB-CON8. The electronic control unit guarantees a stable voltage supply for the respective transmitter/receiver of the FLB or TLB Series.
The electronic control unit also amplifies and processes the analog signal of the receiver in a suitable manner. A micro-controller performs 12-bit analog/digital conversion of the analog signal, allowing recording and evaluation of the signal characteristics at the sensor. Furthermore the electronic control unit offers various options for intelligent transmitting power control (dirt accumulation compensation) at the sensor.

Parameters and measured values can be exchanged between the PC and the electronic control unit through either the RS232 interface or Ethernet interface (by means of an Ethernet adapter). All the parameters can be stored in the non-volatile EEPROM of the electronic control unit through the interface.
The FLB-TLB-CON8-Scope V3.0 Windows® software facilitates parameterisation, diagnostics, and adjustment of the sensor system. The FLB-TLB-CON8-Scope V3.0 software furthermore features the function of a data recorder that automatically records data and saves them on the PC's hard disk.

The sensor system comprising sensor and electronic control unit is temperature-compensated in a range from 0°C to 80°C.

Firmware updates can be easily performed through the RS232 interface even when the sensor system is installed.

When parameterisation is finished, the electronic control unit continues to run in STAND-ALONE operation, without a PC.