FLB Series



FLB-CON3-5 Amplifier

- Suitable for FLB-F-...-C, FLB-H-...-C, FLB-V-...-C sensors
- Sensitivity and gain factor adjustable by means of potentiometer (inside housing)
- Switching state indication by means of a yellow/green LED
- Dynamic and static output
- Threshold correction can be activated
- High switching frequency (typ. 10 kHz)
- Dirt accumulation indication by means of a red LED
- Bright- and dark-switching
- Push-pull output (npn and pnp suitable)

Design

Product name:

FLB-CON3-5

Suitable for connection to frame light barriers of type (cf. page 4):

FLB-F-...-C (1m)
FLB-H-...-C (1m)
FLB-V-...-C (1m)

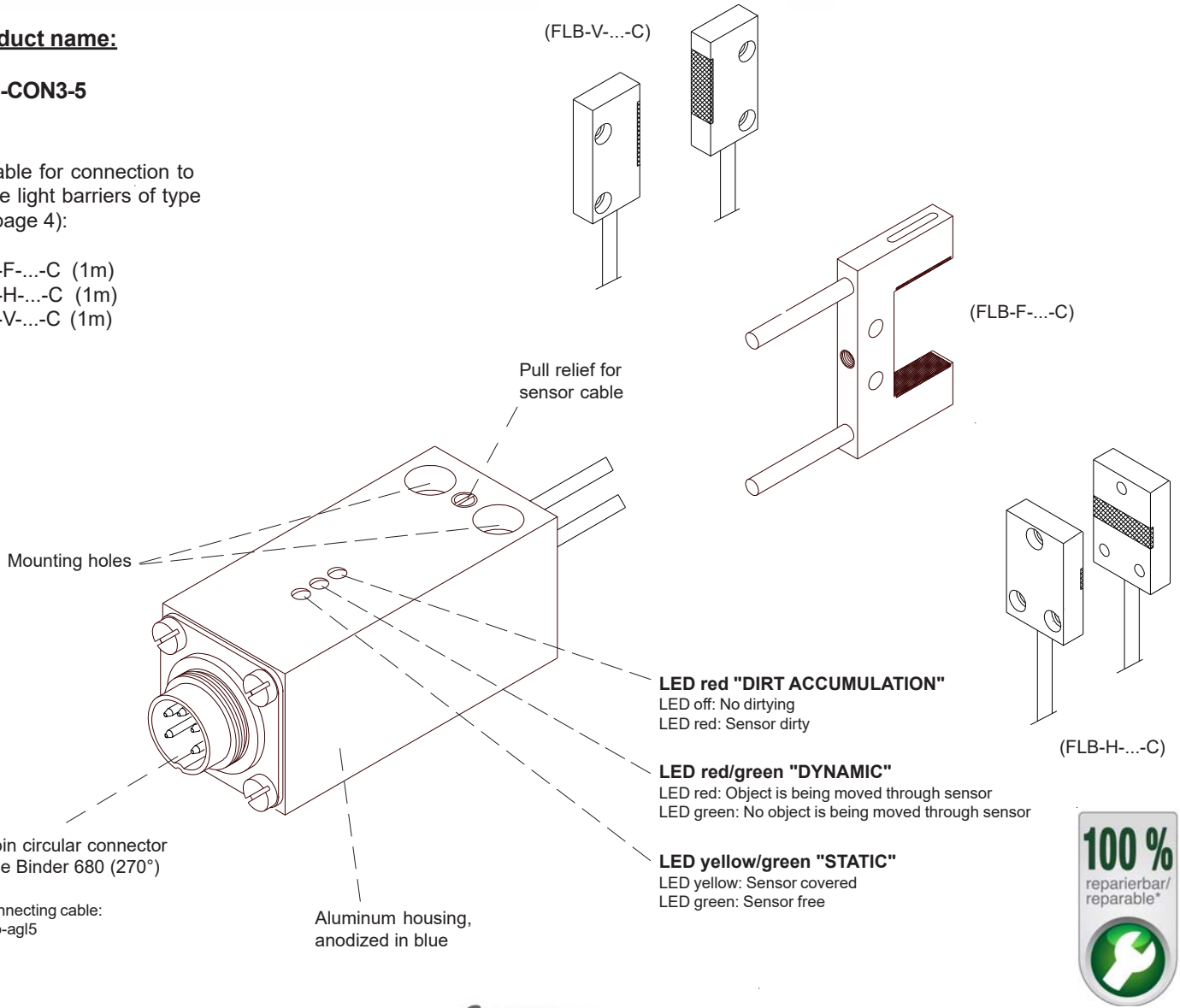

100 % reparierbar/ reparable* * ausgenommen Totalschaden/ excluding total loss

Technical Data

Model	FLB-CON3-5
Voltage supply	+12VDC ... +32VDC Ripple 10% max.
Suitable sensor frontends	FLB-F-...-C, FLB-H-...-C, FLB-V-...-C (cable versions, directly assembled to FLB-CON3-5)
Current consumption	with sensor: typ. 80 mA
Operating temperature range	-20°C ... +60°C
Storage temperature range	-20°C ... +85°C
Housing material	Aluminum, anodized in blue
Housing dimensions	LxWxH approx. 60 mm x 27 mm x 27 mm
Enclosure rating	IP 64
Threshold correction	adjustable by means of an integrated jumper
Output DIGITAL STATIC	1x static: Q: NPN dark-switching (NPN n.o.) / PNP bright-switching (PNP n.c.)
Output DIGITAL DYNAMIC	1x dynamic (pulse length 15 ms) Q: NPN dark-switching (NPN n.o.) / PNP bright-switching (PNP n.c.)
Potentiometer for gain factor	10-revolutions potentiometer integrated in the housing
Potentiometer for trigger threshold	10-revolutions potentiometer integrated in the housing
Dirt accumulation indication	red LED
Switching state indication STATIC	yellow/green LED (yellow = sensor covered, green = sensor free)
Switching state indication DYNAMIC	red/green LED (red = object is being moved through sensor, green = no object is being moved through sensor)
Type of connector	Connection to PLC: 5-pole female connector Binder Series 680 (270°) Connection to sensor: via integrated cable
Connecting cable to PLC	cab-agl5 (l = 2m)
Switching frequency	typ. 10 kHz
Max. switching current	200 mA, short-circuit proof
EMC test acc. to	DIN EN 60947-5-2 CE

Dimensions

(All dimensions in mm)

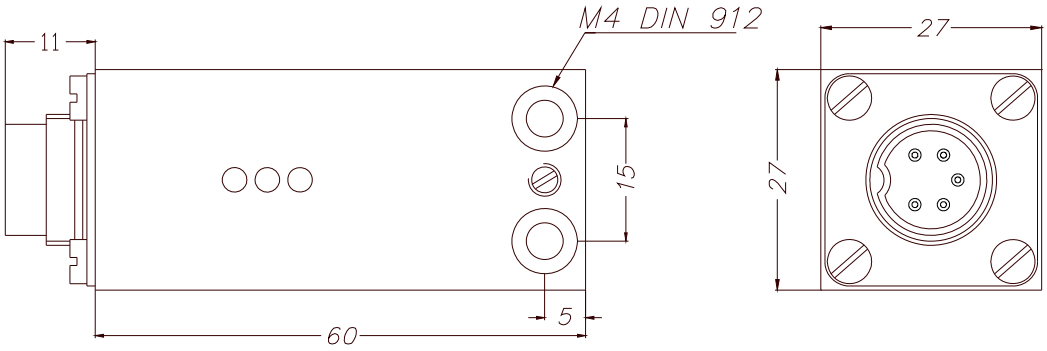

Connector Assignment

5-pin connector type Binder Series 680

Pin No.:	Color:	Assignment:
1	blue	0V
2	brown	+Ub (+12 ... +32VDC)
3	white	Output Q
4	black	Output DYNAMIC (15 ms)
5	red	Connection control

Bridge

Connecting cable: cab-agl5 (l=2m)

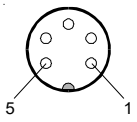

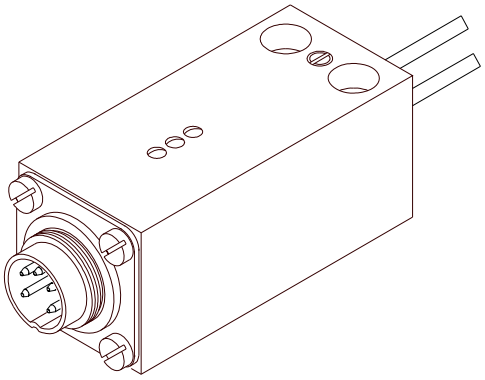

FLB-CON3-5

Setting

Procedure for the adjustment of potentiometers and jumper:

a) Unscrew the 4 slotted head screws
b) Unscrew the 2 plastic screws (tensile relief of the two cablesl)
c) Carefully pull the electronic unit out of the aluminum housing
d) Carry out setting of potentiometers and of jumper

Jumper for selection of threshold: static or dynamic

Jumper on the right: static (= standard adjustment)
Jumper in the left: dynamic (corrected threshold)

Threshold correction:
The adjusted threshold automatically adapts to the current maximum value, this is to prevent - for instance in case of dirt accumulation - a shift of the trigger point. Furthermore this allows reliable detection of smallest objects.

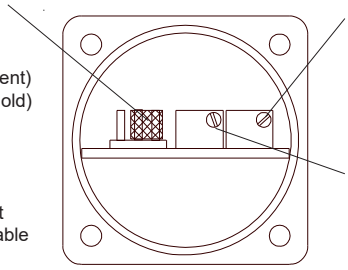

Potentiometer for adjustment of gain factor
Increase of analog signal:
Rotation anticlockwise
(10-step-potentiometer)

Potentiometer for adjustment of threshold
Increase of sensitivity:
Rotation anticlockwise
(10-step-potentiometer)

Suitable Frontends

Sensor frontend suitable for connection to FLB-CON3-5:
(please select sensor frontend and order it together with the FLB-CON3-5, as for delivery will both have to be assembled)

FLB-F-...-C (1m):
(fork shape)

FLB-F-05/20 (A = 5 mm, B = 20 mm)
FLB-F-10/20 (A = 10 mm, B = 20 mm)
FLB-F-15/20 (A = 15 mm, B = 20 mm)
FLB-F-20/20 (A = 20 mm, B = 20 mm)
FLB-F-20/40 (A = 20 mm, B = 40 mm)
FLB-F-20/50 (A = 20 mm, B = 50 mm)
FLB-F-25/20 (A = 25 mm, B = 20 mm)
FLB-F-30/10 (A = 30 mm, B = 10 mm)
FLB-F-30/20 (A = 30 mm, B = 20 mm)
FLB-F-40/20 (A = 40 mm, B = 20 mm)
FLB-F-40/25 (A = 40 mm, B = 25 mm)
FLB-F-40/40 (A = 40 mm, B = 40 mm)

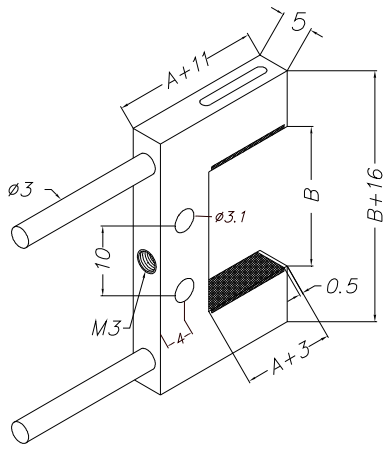

Dim. A =
Length of active measuring range

Dim. B =
Fork width = distane transmitter/receiver

FLB-H-...-C (1m):
(horizontal light curtain)

FLB-H-05 (A = 5 mm)
FLB-H-10 (A = 10 mm)
FLB-H-15 (A = 15 mm)
FLB-H-20 (A = 20 mm)
FLB-H-25 (A = 25 mm)
FLB-H-30 (A = 30 mm)
FLB-H-40 (A = 40 mm)

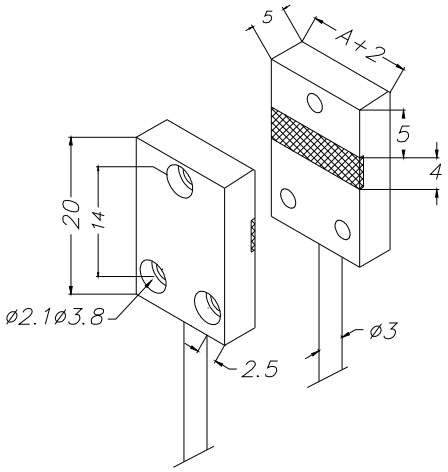

Dim. A =
Length of active measuring range:

5 mm
10 mm
15 mm
20 mm
25 mm
30 mm
40 mm
50 mm

FLB-V-...-C (1m):
(vertical light curtain)

FLB-V-05 (A = 5 mm)
FLB-V-10 (A = 10 mm)
FLB-V-15 (A = 15 mm)
FLB-V-20 (A = 20 mm)
FLB-V-25 (A = 25 mm)
FLB-V-30 (A = 30 mm)
FLB-V-40 (A = 40 mm)

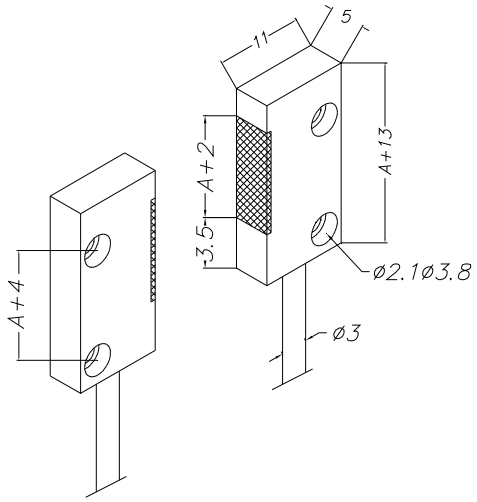

Dim. A =
Length of active measuring range

5 mm
10 mm
15 mm
20 mm
25 mm
30 mm
40 mm
50 mm
60 mm

All dimensions in mm