FLB Series

FLB-CIG-25R-RD

(Glue joint detection)

- Detection of glue joints, dark areas, and double sheets, with extremely thin, semi-transparent paper sorts
- IR light spot (Ø typ. 6 mm)
- IR light power adjustment
- RESET input
- Detection of inclusions in the paper, and of dirtying of the paper
- Sensitivity setting by means of a potentiometer
- Automatic adjustment to the respective product by means of automatic light power correction

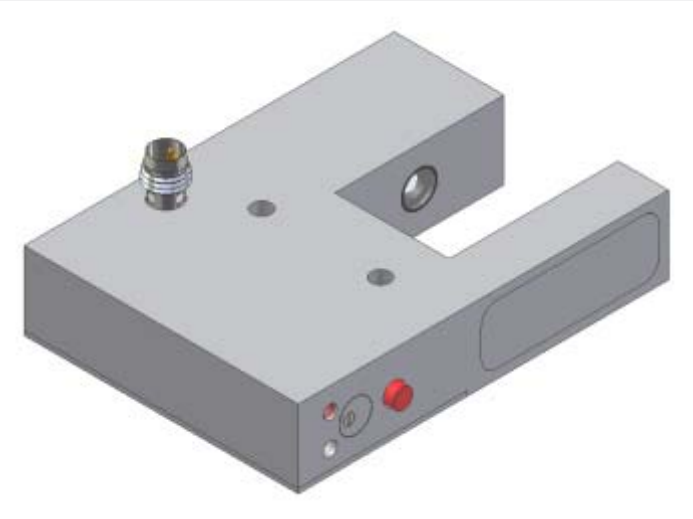

Design

Product name:

FLB-CIG-25R-RD

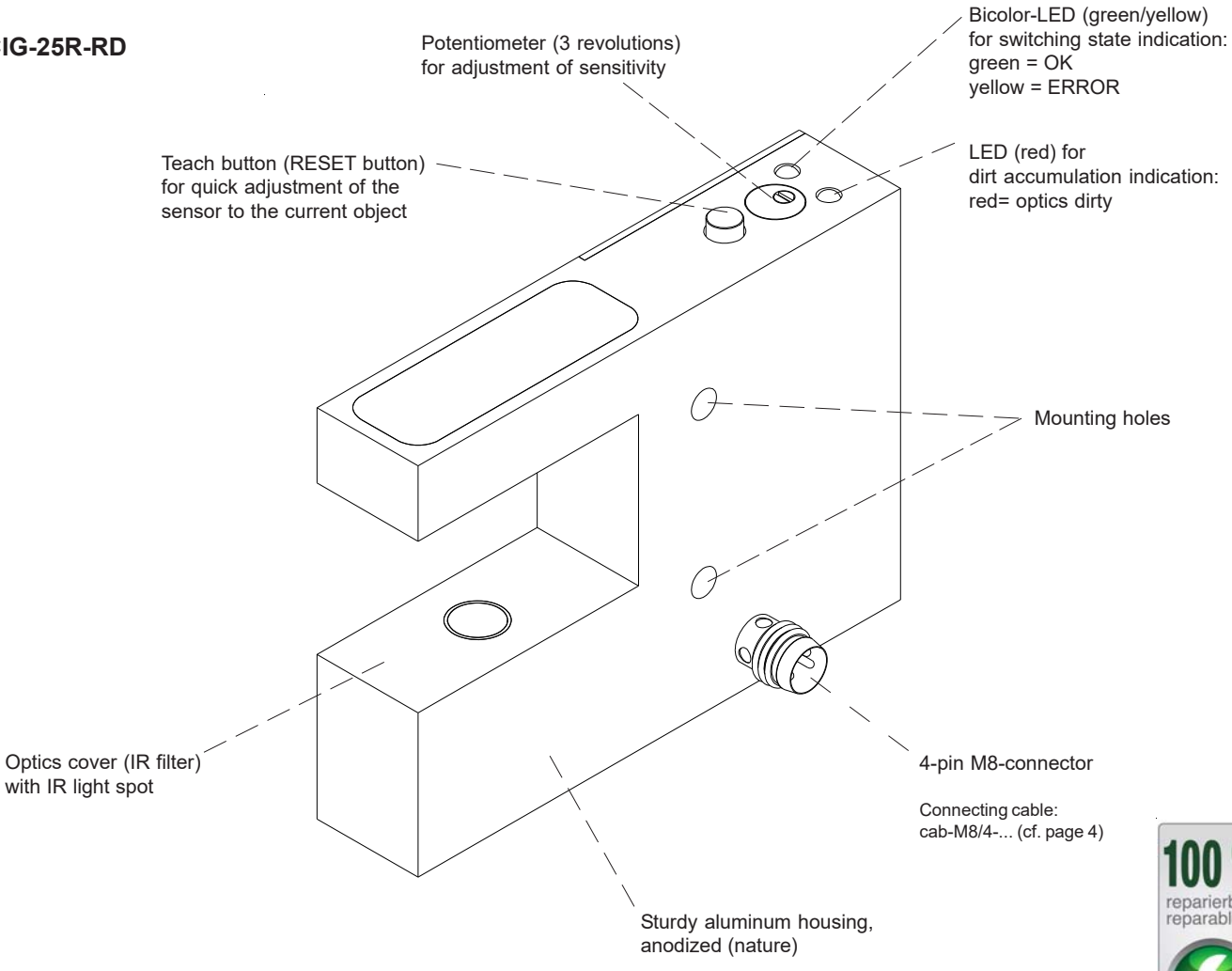

100 % reparierbar/ reparable*
* ausgenommen Totalschaden/ excluding total loss

Technical Data

Model	**FLB-CIG-25R-RD**
Min. detectable error	typ. 3 mm Ø of local defects (holes, dark spots)
Optical filter	Day light block filter
Illuminant	Infrared (905 nm), constant light
Voltage supply	+12VDC ... +32VDC, reversed-polarity protected, overcurrent protected
Light spot	Ø typ. 6 mm
Ambient light	up to 5000 Lux
Enclosure rating	IP67
Current consumption	typ. 200 mA
EMC test acc. to	DIN EN 60947-5-2 CE
Type of connector	4-pole M8-connector
Connecting cable	cab-M8/4-... (cf. page 4)
Dimensions	Total dimensions (without connector): LxWxH approx. 81 mm x 60 mm x 17 mm (cf. page 4)
Operating temperature range	-20°C ... +60°C
Storage temperature range	-20°C ... +85°C
Housing material	Aluminum, anodized (nature)
Max. switching current	100 mA, short-circuit-protected
Switching frequency	typ. 1 kHz
Output	Qinv: pnp dark-switching, npn bright-switching In case of glue joint, dark area, or double sheet: Output dynamic, 100 ms HIGH pulse
Sensitivity setting	by means of a potentiometer (3 revolutions)
Dirt accumulation indication	by means of a red LED
Switching state indication	by means of a bicolor-LED: green: OK yellow: ERROR (glue joint, dark area, double sheet)

Dimensions

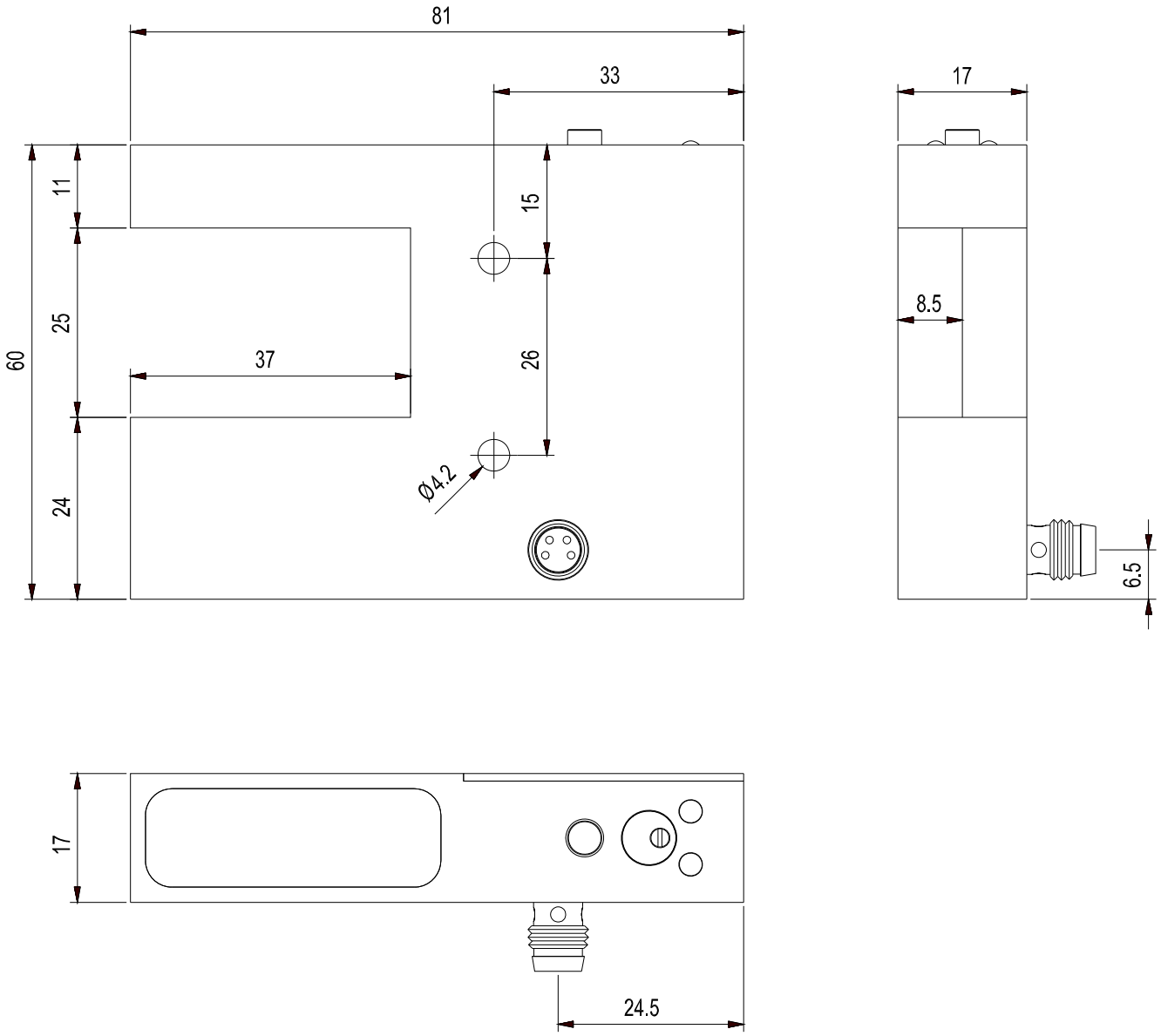

(All dimensions in mm)

Connector Assignment

4-pin M8-connector:

Pin No.:	(Color)	Assignment:
1	(brn)	+Ub (+12VDC ... +32VDC)
2	(wht)	RESET INPUT (+5V ... +24V)
3	(blu)	0V (GND)
4	(blk)	OUTPUT Qinv

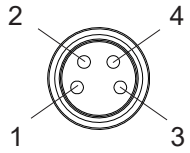

Connecting Cables

Available connecting cables:

cab-M8/4-g-2	(l=2m, outer jacket PUR)
cab-M8/4-g-5	(l=5m, outer jacket PUR)
cab-M8/4-w-2	(angle type 90°, l=2m, outer jacket PUR)
cab-M8/4-w-5	(angle type 90°, l=5m, outer jacket PUR)

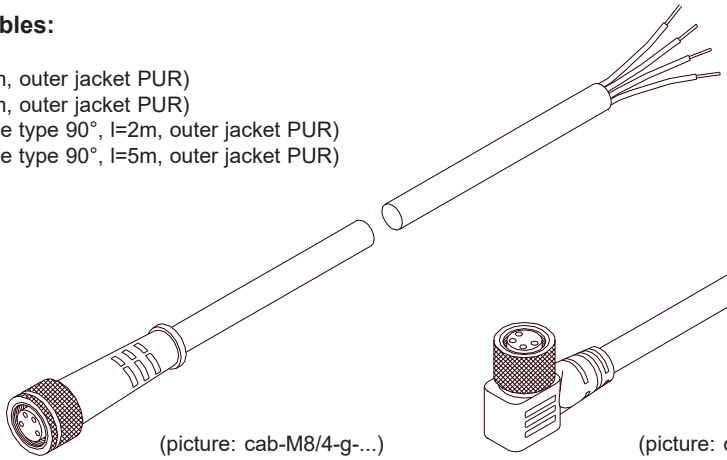

(picture: cab-M8/4-g-...)

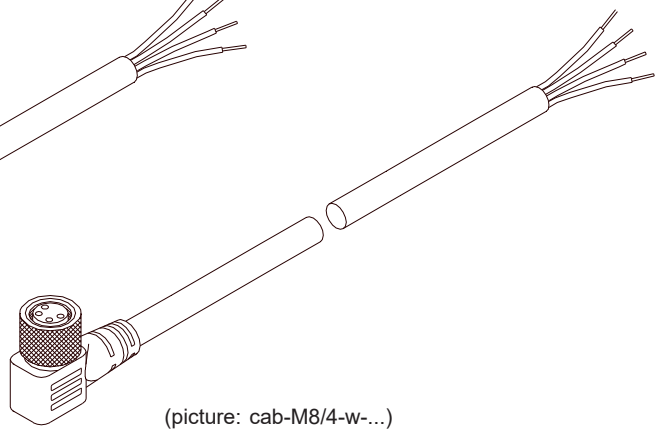

(picture: cab-M8/4-w-...)

Setting

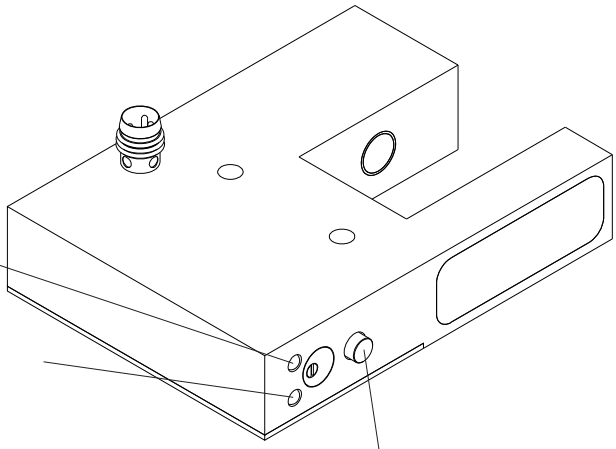

LED (red) for dirt accumulation indication
red = optics dirty

Bicolor-LED (green/yellow) for glue joint detection:
green = OK
yellow = ERROR (glue joint, dark area, or double sheet)

Teach button (RESET button)
for quick adjustment of the IR light power to the current object (paper).

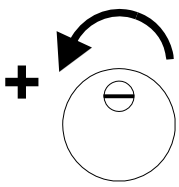

Potentiometer (3 revolutions) for adjustment of sensitivity
Rotation counter-clockwise:
Increase of sensitivity