FLB Series

FLB-F2-...-HS (High Speed)

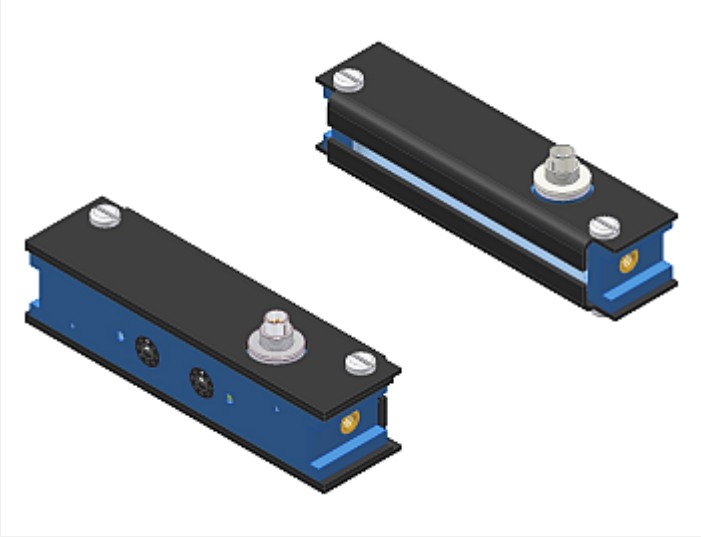

- High switching frequency (10kHz)
- Integrated electronics
- High sensitivity (adjustable via 5-step switch)
- Pulse length adjustable via 5-step switch
- Dynamic and static output
- Analog output optional (0V ... +10V)
- Switching state indication by means of a red/green LED
- Dirt acculumation indication by means of a yellow LED
- Transmitter/receiver distance variabel by means of crosshead
- Mechanical protection of optics, sturdy aluminum housing

Design

Product name:

FLB-F2-(size)*-Q-HS
FLB-F2-(size)*-Qinv-HS
FLB-F2-(size)*-Q-ANA-HS

Q = Switching output:
PNP bright-switching (PNP n.c.)
NPN dark-switching (NPN n.o.)

Qinv = Switching output:
PNP dark-switching (PNP n.o.)
NPN bright-switching (NPN n.c.)

ANA = Additional analog output
(0V ... +10V)

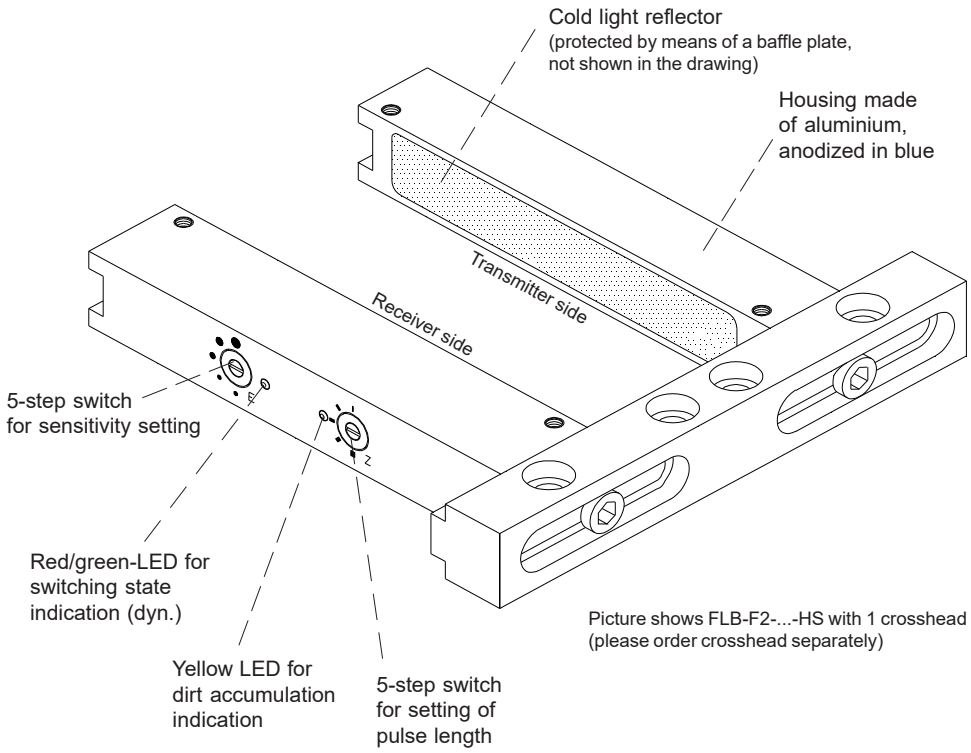

Picture shows FLB-F2-...-HS with 1 crosshead
(please order crosshead separately)

***Available sizes:**
(dimensions cf. page 3)

A = 60 / 80 / 100 / 160 / 200 / 300 mm (A = width of cold light reflector)

Product name crossheads:
(dimensions cf. page 3 and 8-11)

FLB-TRA-60	= max. 60 mm distance transmitter/receiver (total length of crosshead = 105 mm)
FLB-TRA-80	= max. 80 mm distance transmitter/receiver (total length of crosshead = 125 mm)
FLB-TRA-100	= max. 100 mm distance transmitter/receiver (total length of crosshead = 145 mm)
FLB-TRA-155	= max. 155 mm distance transmitter/receiver (total length of crosshead = 205 mm)
FLB-TRA-355	= max. 355 mm distance transmitter/receiver (total length of crosshead = 400 mm)
FLB-TRA-555	= max. 555 mm distance transmitter/receiver (total length of crosshead = 600 mm)
FLB-TRA-755	= max. 755 mm distance transmitter/receiver (total length of crosshead = 800 mm)

Technical Data

Model	**FLB-F2-...-HS**
Max. transmitter/ receiver distance	800 mm
Min. detectable object	typ. 0.6 mm
Optical filter	Cold-light reflector
Light type	Infrared
Voltage supply	+12VDC ... +32VDC, protected against polarity reversal, overload protected
Pulsating light operation	approx. 5 kHz
Ambient light	up to 5000 Lux
Type of protection	IP67
Current consumption	200 mA
EMC test acc. to	IEC - 801... CE
Connector type	Transmitter side: 5-pin connector, Binder Series 712, receiver side: 8-pin connector, Binder Series 712 Connection to PLC: 7-pin connector, Binder Series 680
Operating temperature range	-20°C ... +60°C
Storage temperature range	-20°C ... +85°C
Housing	Aluminum, anodized in blue
Max. switching current	200 mA, short-circuit-proof
Switching frequency	typ. 10 kHz
Output digital	Q: PNP bright-switching (PNP normally closed), NPN dark-switching (NPN normally open) Qinv: PNP dark-switching (PNP normally open), NPN bright-switching (NPN normally closed)
Analog output	with option -ANA: 0V ... +10V
Sensitivity setting	in 5 steps by means of step switch
Pulse lengthening	in 5 steps by means of step switch (20 ms ... 300 ms)
Dirt accumulation display	By means of yellow LED and digital DIRT ACCUMULATION output
Switching state display	By means of bi-color LED: RED (object passes light curtain) / GREEN (light curtain free, or no change)
Intensitiy setting	in 5 steps by means of step switch

Dimensions

FLB-F2-(size)-...-HS:

Size A (mm):

60
80
100
160
200
300

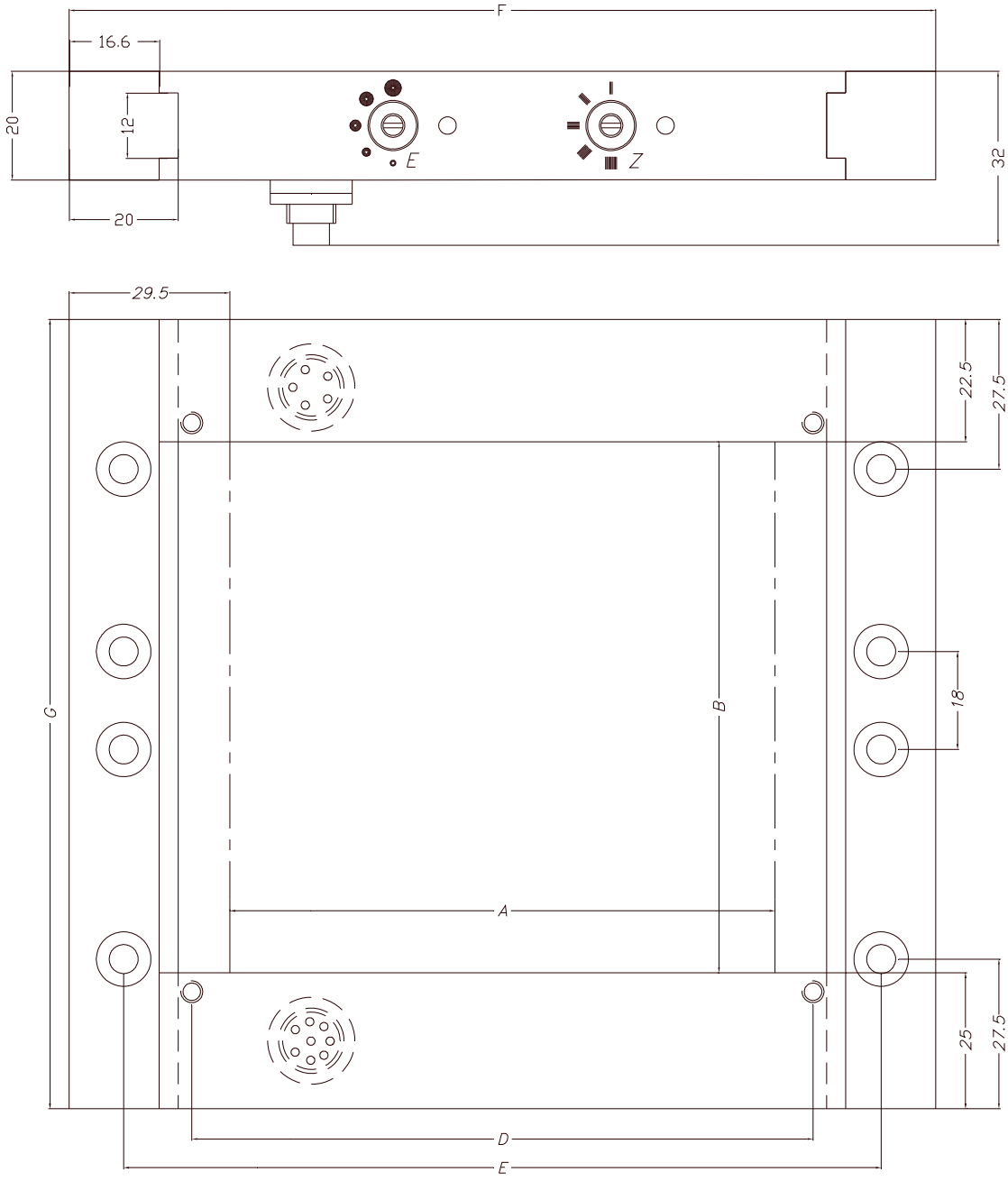

FLB-TRA-(width):

Width B (mm):

60
80
100
155
355
555
755

A	B	C	D	E	F	G
60 80 100 160 200 300	B (FLB-TRA-B)	27.5	A + 14	B + 20	A + 59	B + 47.5

(All dimensions in mm)

Connector Assignment

Connector assignment for FLB-F2-...-HS:

5-pole connector type 712 (transmitter side)

Pin No.:	Assignment:
1	GND (0V)
2	+Ub (+12VDC ... +32VDC)
3	F0
4	/F0
5	Window

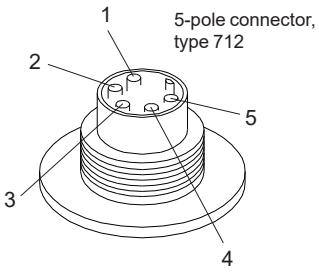

8-pole connector type 712 (receiver side)

Pin No.:	Assignment:
1	GND (0V)
2	+Ub (+12VDC ... +32VDC)
3	Output DYN
4	Output STAT
5	with "Q": Output DIRT ACCUMULATION with "Qinv": Output INV DYN with "ANA": ANALOG (0V...+10V)
6	F0
7	/F0
8	Window

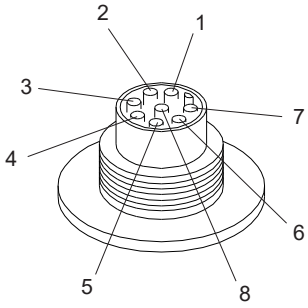

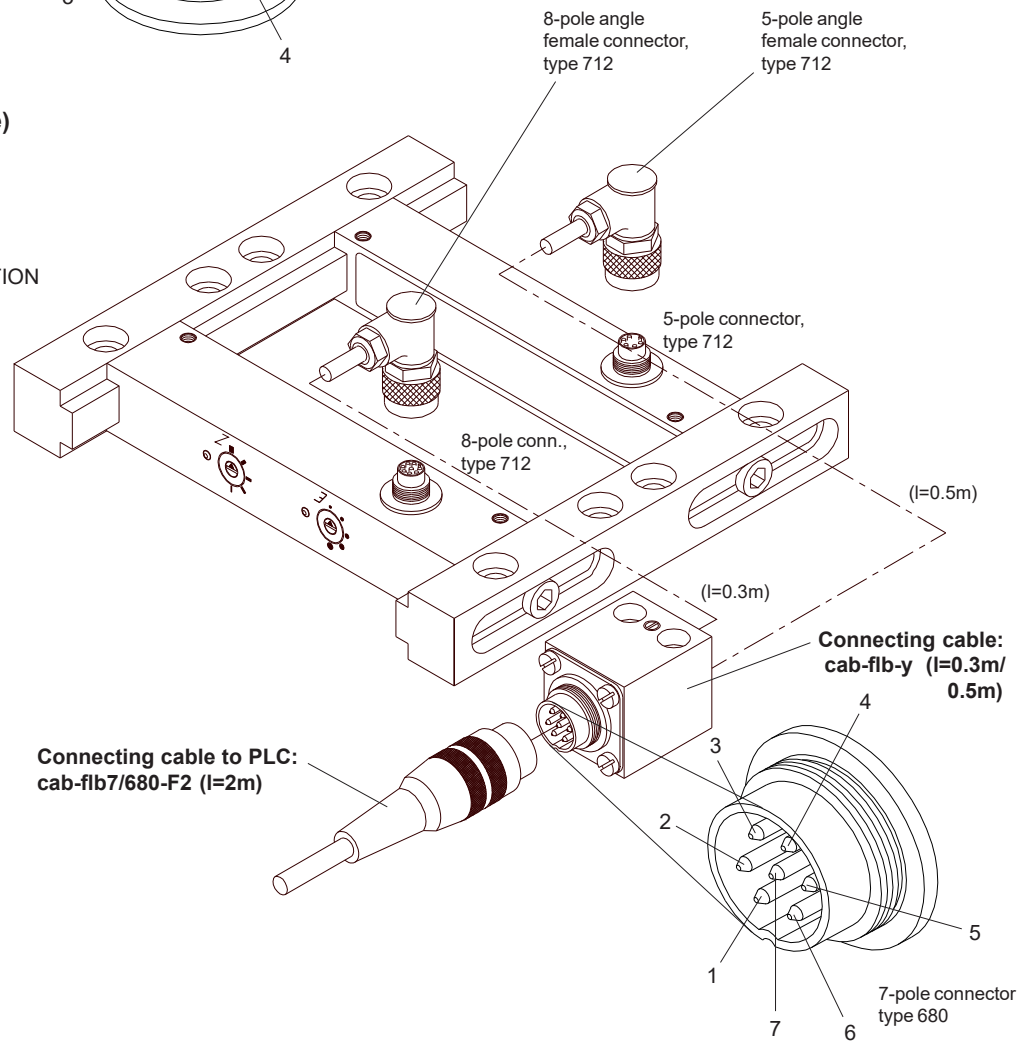

Connecting cable cab-flb7/680-F2:

Pin No.:	Assignment:	Color:
1	Output DYN	white
2	Output STAT	black
3	with "Q": Output DIRT ACCUMULATION with "Qinv": Output INV DYN with "ANA": ANALOG (0V...10V)	grey
4	n.c.	yellow
5	GND (0V)	blue
6	+Ub (+12VDC ... +32VDC)	brown
7	n.c.	green

7-pole connector type 680 (connecting cable cab-flb-y):

Pin No.:	Assignment:
1	Output DYN
2	Output STAT
3	with "Q": Output DIRT ACCUMULATION with "Qinv": Output INV DYN with "ANA": ANALOG (0V...10V)
4	n.c.
5	GND (0V)
6	+Ub (+12VDC ... +32VDC)
7	n.c.

Setting

Sensitivity setting (step-switch „E“):

Sensitivity can be adjusted by means of a step-switch.
The term ‘sensitivity’ defines the minimum detectable part size.
The sensitivity can be adjusted in 5 steps.

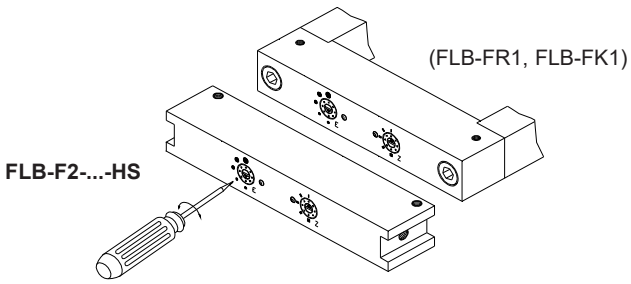

Step	Part size (dyn.)	Part size (stat.)
1	>= 0.5 mm	>= 2 mm
2	>= 0.7 mm	>= 3 mm
3	>= 1.3 mm	>= 5 mm
4	>= 1.7 mm	>= 7 mm
5	>= 2.5 mm	>= 10 mm

Adjustment of pulse lengthening (step-switch „Z“):

The pulse length of the dynamic output can be adjusted by means of a step-switch. 5 pulse lengths are available.

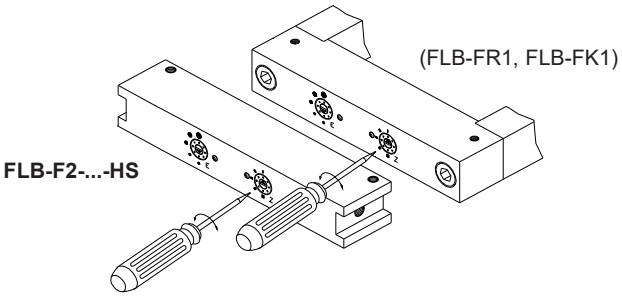

Step	Pulse length
1	300 ms
2	200 ms
3	100 ms
4	50 ms
5	20 ms

Dirt accumulation display (yellow LED):

In addition to a digital dirt accumulation output the user is informed about the dirt accumulation status by means of a yellow LED.
If this yellow LED lights up, the transmitter or receiver side should be checked for dirtying.

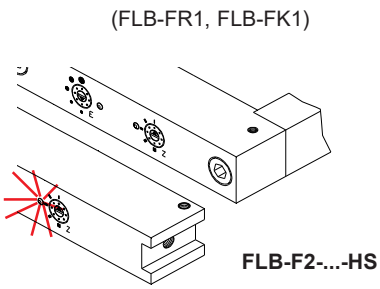

Switching state display (red/green LED):

The switching state is indicated by a red/green LED. In case that a measuring object is detected, the LED changes from GREEN to RED.
The two-color-LED is coupled to the dynamic output, i.e. after pulse end the LED returns to its starting state = GREEN.

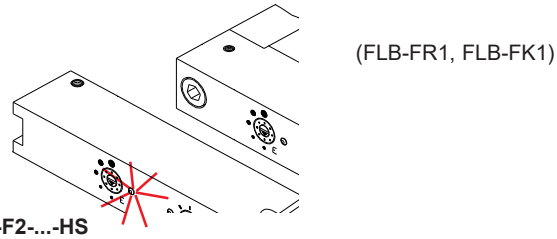

Setting

Adjustment of intensity (step-switch *I*):

With the FLB-F2-...HS type the intensity (IR light output) is adjusted to the respective transmitter/receiver distance by means of a 5-step switch.

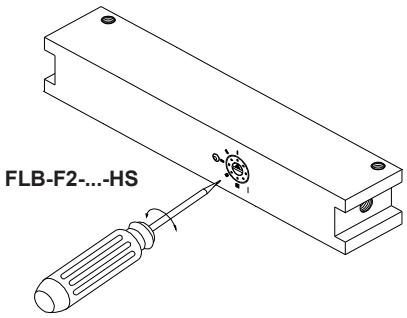

Step	Transmitter/receiver distance
1	<= 15 mm
2	<= 40 mm
3	<= 80 mm
4	<= 150 mm
5	> 150 mm

Connecting Cable

Connecting cable cab-flb-y-...

Available lengths:

cab-flb-y-0,3m/0,5m (l=0,3m/0,5m)
cab-flb-y-0,5m (l=0,5m/0,5m)
cab-flb-y-1m (l=1m/1m)
cab-flb-y-2m (l=2m/2m)
cab-flb-y-3m (l=3m/3m)

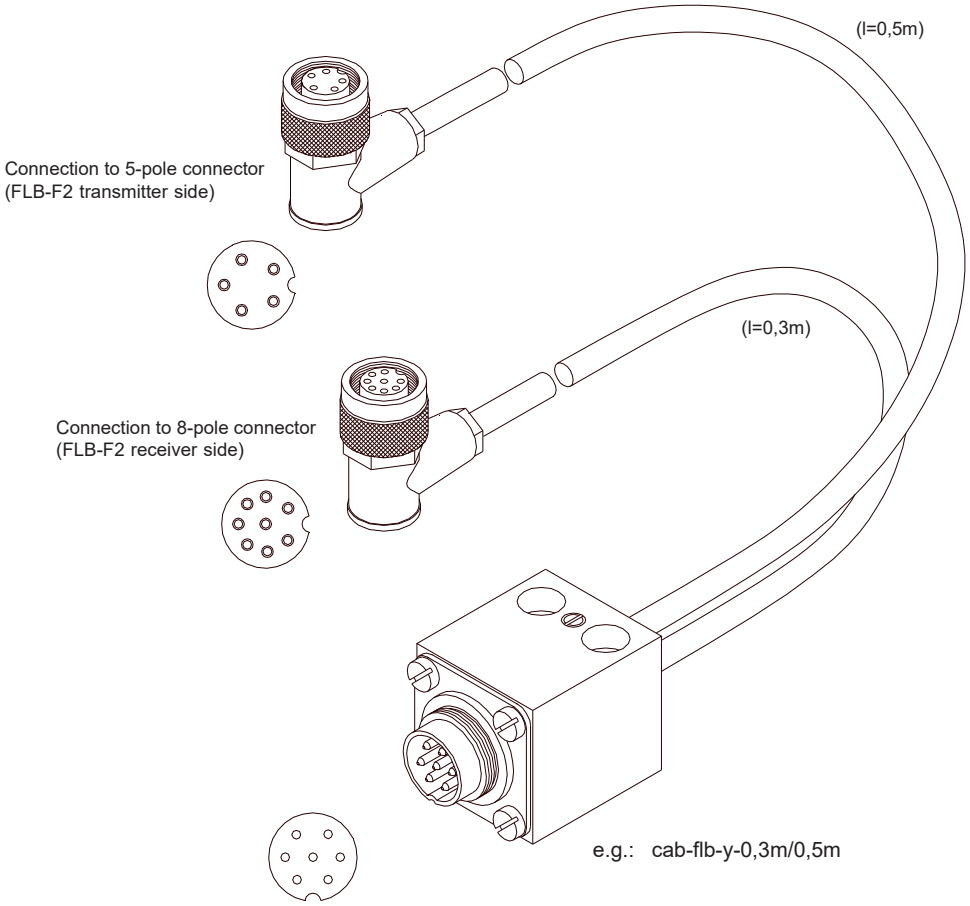

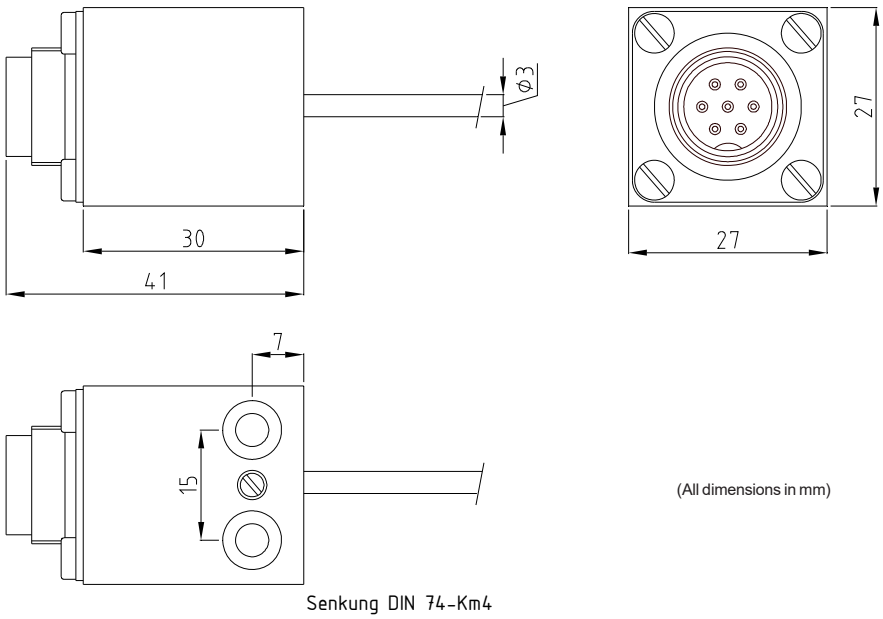

(All dimensions in mm)

Crossheads

Available crossheads:

FLB-TRA-60	Distance FLB-F2 transmitter/receiver = max. 60 mm (total length crosshead = 105 mm)
FLB-TRA-80	Distance FLB-F2 transmitter/receiver = max. 80 mm (total length crosshead = 125 mm)
FLB-TRA-100	Distance FLB-F2 transmitter/receiver = max. 100 mm (total length crosshead = 145 mm)
FLB-TRA-155	Distance FLB-F2 transmitter/receiver = max. 155 mm (total length crosshead = 205 mm)
FLB-TRA-355	Distance FLB-F2 transmitter/receiver = max. 355 mm (total length crosshead = 400 mm)
FLB-TRA-555	Distance FLB-F2 transmitter/receiver = max. 555 mm (total length crosshead = 600 mm)
FLB-TRA-755	Distance FLB-F2 transmitter/receiver = max. 755 mm (total length crosshead = 800 mm)

FLB-TRA-60

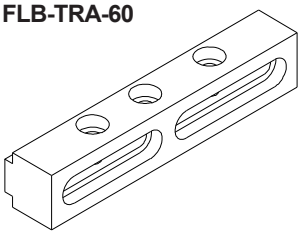

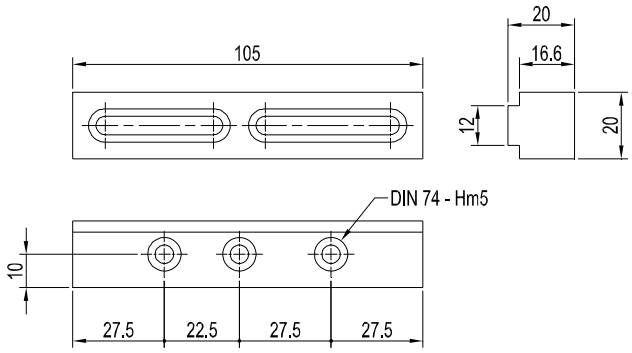

FLB-TRA-80

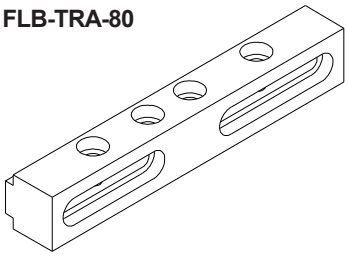

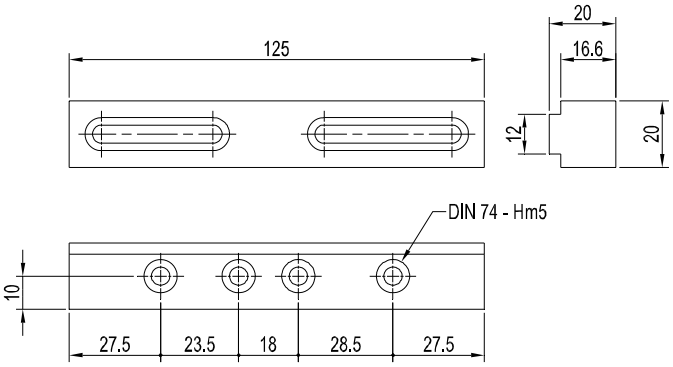

FLB-TRA-100

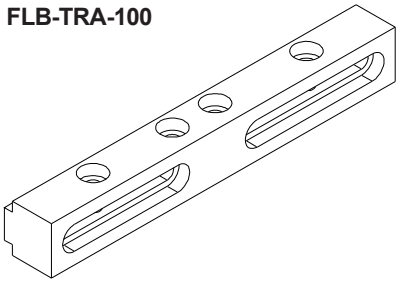

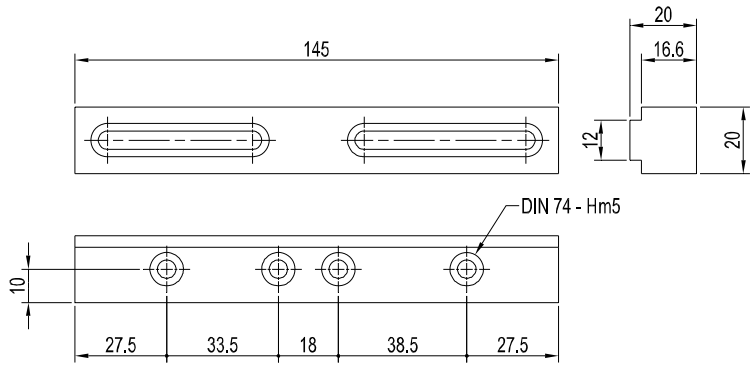

(All dimensions in mm)

Crossheads

FLB-TRA-155
FLB-TRA-355

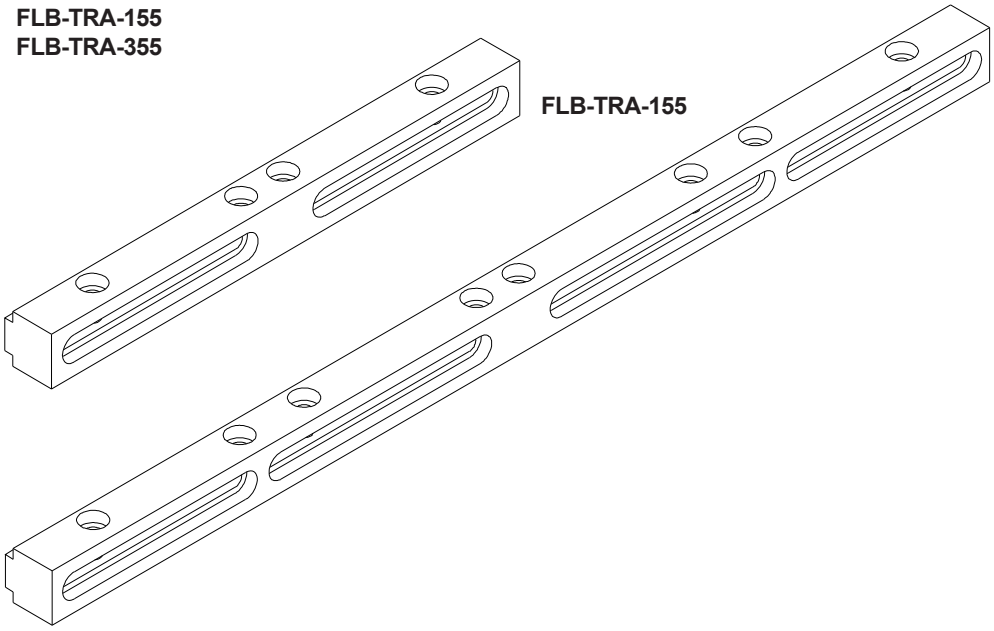

FLB-TRA-155

FLB-TRA-355

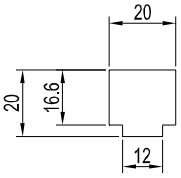

FLB-TRA-355

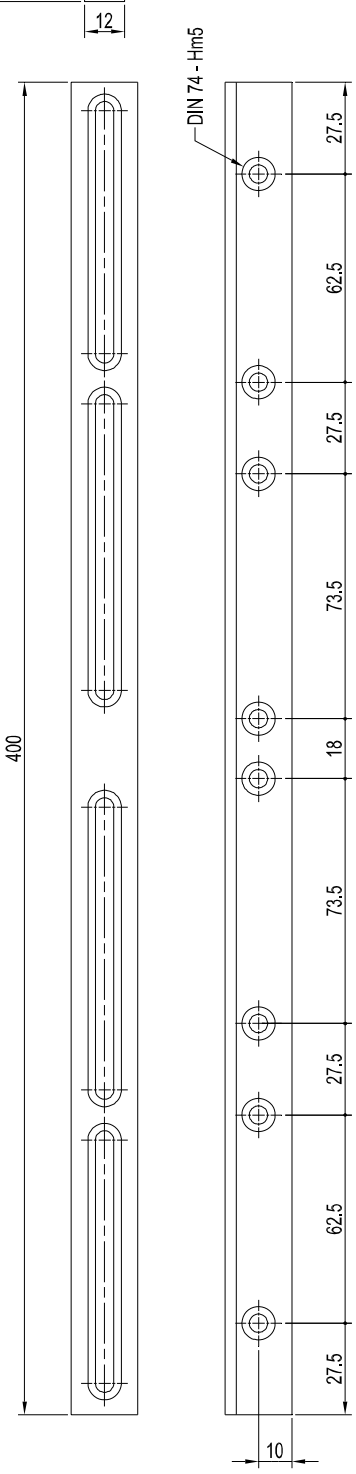

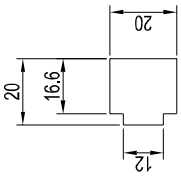

FLB-TRA-155

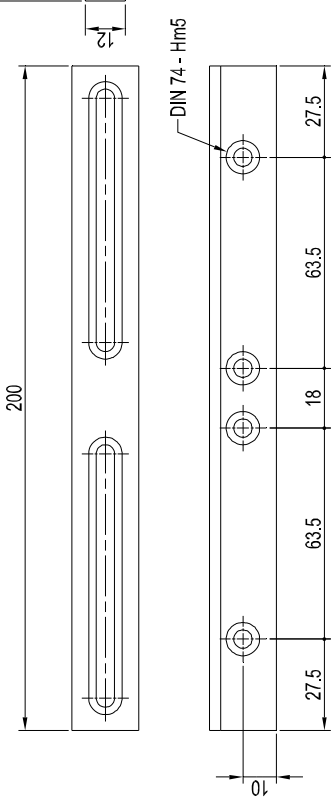

(All dimensions in mm)

Crossheads

FLB-TRA-555

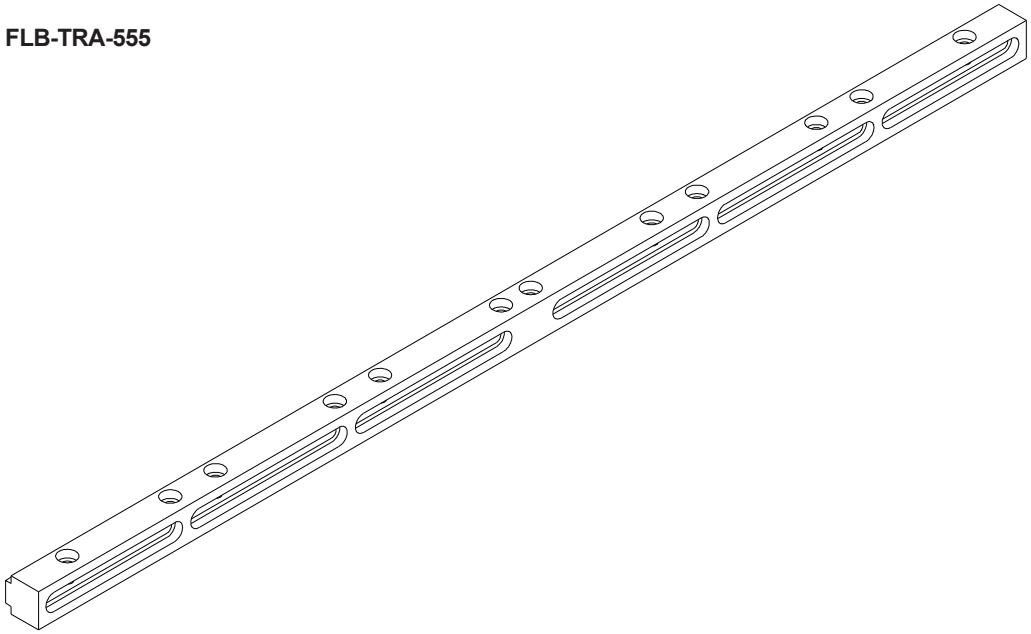

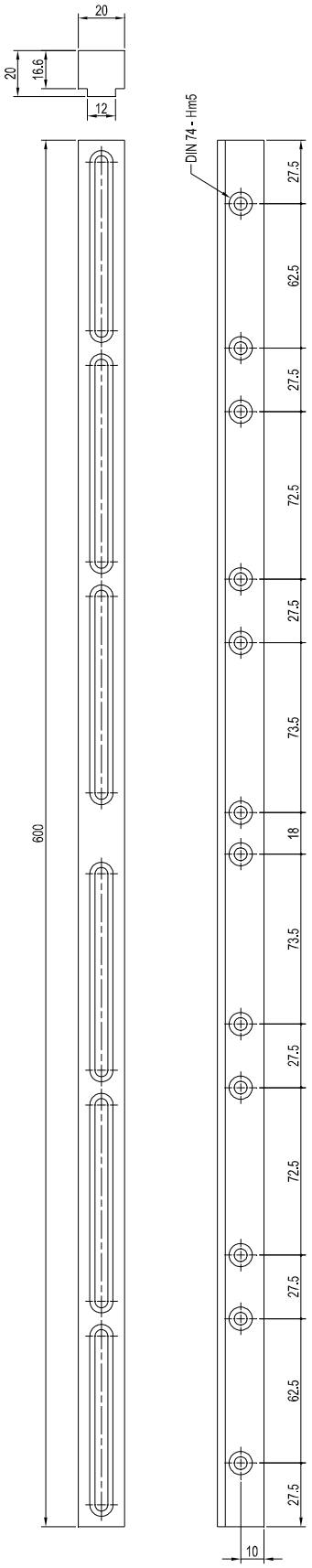

(All dimensions in mm)

Crossheads

FLB-TRA-755

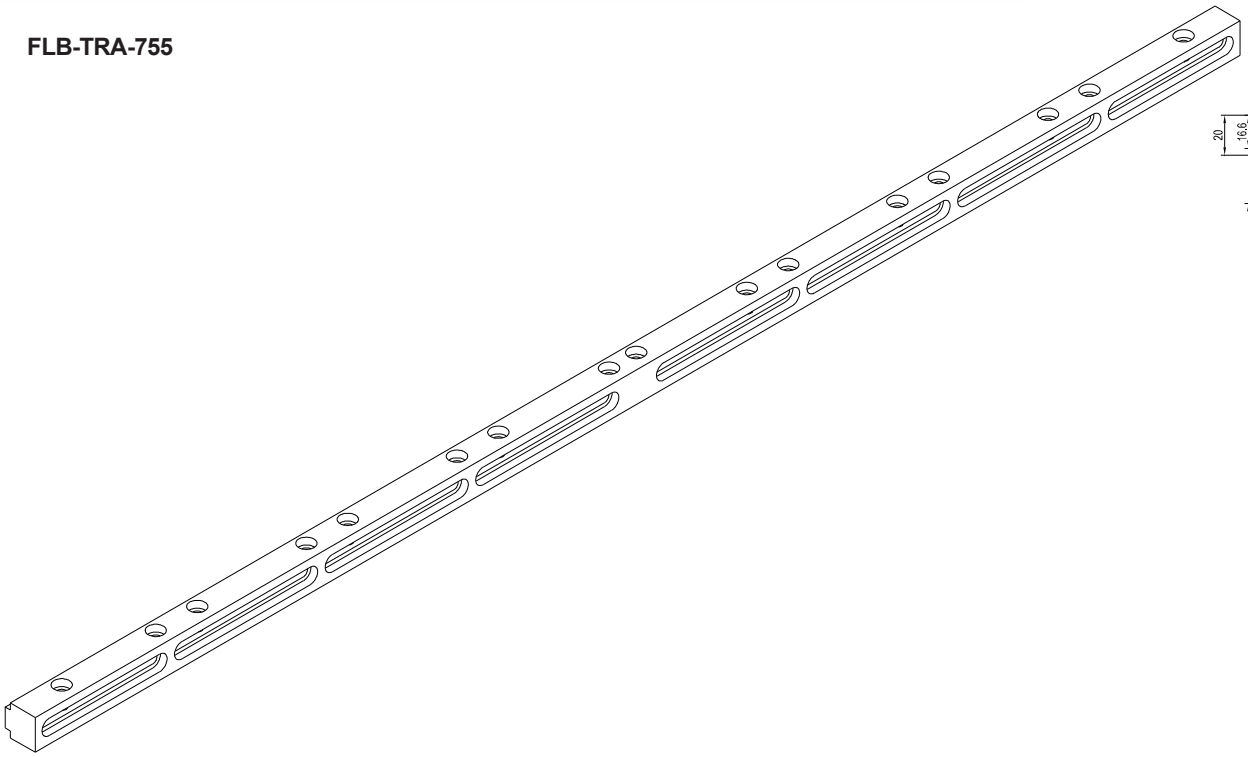

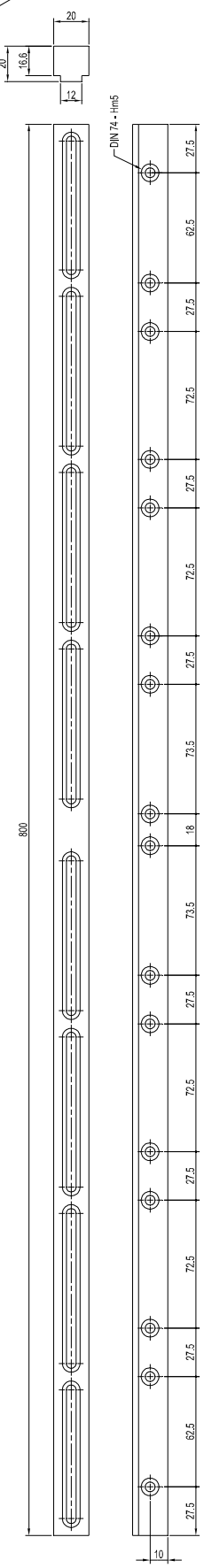

(All dimensions in mm)