FLB Series

FLB-F2-...
FLB-F2-...-WR (Wide Range)

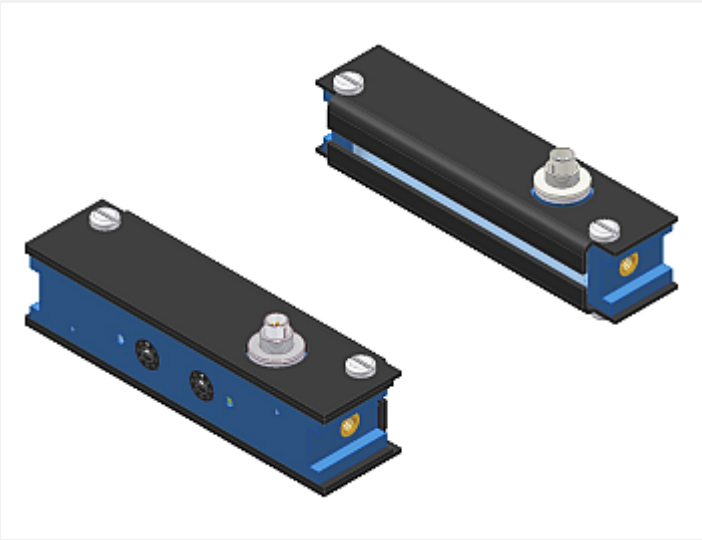

- Integrated electronics
- High sensitivity (adjustable via 5-step switch)
- Pulse length adjustable via 5-step switch
- Dynamic and static output
- Analog output (0...+10V or 4...20mA)
- Switching state indication by means of a red/green LED
- Dirt acculumation indication by means of a yellow LED
- Big transmitter/receiver distance (up to 3m with type -WR)
- Transmitter/receiver distance variable by means of crosshead
- Mechanical protection of optics, sturdy aluminum housing

Design

Product name:

FLB-F2-(size)*-Q
FLB-F2-(size)*-Qinv
FLB-F2-(size)*-Q-ANA**
(analog output 0...10V or 4...20mA,
depends on conneting cable used)

For big transmitter/receiver distances (max. 3m):
FLB-F2-(size)*-Q-WR
FLB-F2-(size)*-Qinv-WR
FLB-F2-(size)*-Q-ANA-WR**
(analog output 0...10V or 4...20mA,
depends on conneting cable used)

Q = Switching output:
PNP bright-switching (PNP n.c.)
NPN dark-switching (NPN n.o.)
Qinv = Switching output:
PNP dark-switching (PNP n.o.)
NPN bright-switching (NPN n.c.)
**ANA = Additional analog output:
Voltage (0V ... +10V) when using connecting cable cab-flb-y-(length)
alternatively
I-OUT (4...20mA) when using connecting cable cab-flb-y-4/20-(length)
WR = Wide Range

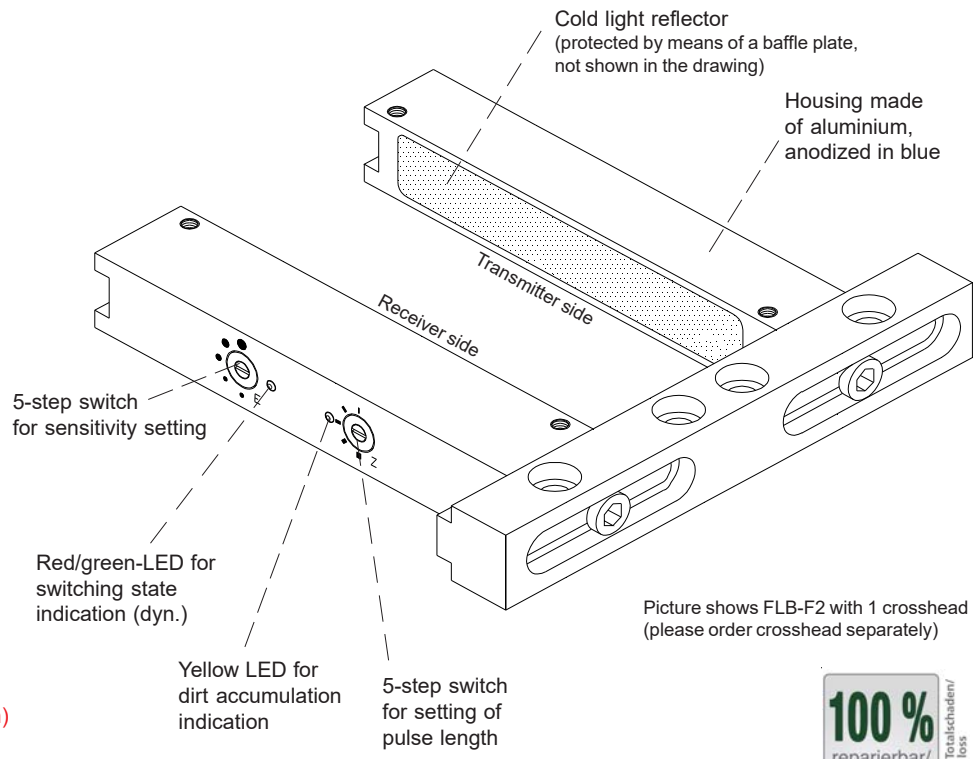

Picture shows FLB-F2 with 1 crosshead
(please order crosshead separately)

100 % reparierbar/ reparable* * ausgenommen Totalschaden/ excluding total loss

***Available sizes:**
(dimensions cf. page 3)

A = 60 / 80 / 100 / 160 / 200 / 300 mm (A = width of cold light reflector)

Product name crossheads:
(dimensions cf. page 3 and 10-13)

FLB-TRA-60	= max. 60 mm distance transmitter/receiver (total length of crosshead = 105 mm)
FLB-TRA-80	= max. 80 mm distance transmitter/receiver (total length of crosshead = 125 mm)
FLB-TRA-100	= max. 100 mm distance transmitter/receiver (total length of crosshead = 145 mm)
FLB-TRA-155	= max. 155 mm distance transmitter/receiver (total length of crosshead = 205 mm)
FLB-TRA-355	= max. 355 mm distance transmitter/receiver (total length of crosshead = 400 mm)
FLB-TRA-555	= max. 555 mm distance transmitter/receiver (total length of crosshead = 600 mm)
FLB-TRA-755	= max. 755 mm distance transmitter/receiver (total length of crosshead = 800 mm)

Technical Data

Model	FLB-F2-...	FLB-F2-...-WR
Max. distance transmitter/receiver	800 mm	3000 mm
Min. detectable object	typ. 0.6 mm	
Optical window	cold-light reflector	
Light source	infrared	
Voltage supply	+24VDC (±10%), reverse-polarity potected, overload protected	
Alternating light operation	approx. 5 kHz	
Ambient light	up to 5000 Lux	
Enclosure rating	IP67	
Current consumption	200 mA	
EMC test acc. to	DIN EN 60947-5-2 CE	
Type of connector	transmitter side: 5-pole connector, Binder series 712 receiver side: 8-pole connector, Binder series 712 connection to PLC: 7-pole connector, Binder series 680	
Operating temp. range	-20°C ... +60°C	
Storage temperature range	-20°C ... +85°C	
Housing material	aluminum, anodized in blue	
Housing dimensions	cf. page 3	
Max. switching current	200 mA, short-circuit proof	
Switching frequency	typ. 1 kHz	
Outputs	1x output DYNAMIC (pnp bright-switching/npn dark-switching) 1x output QUASI-STATIC (typ. 10....200s, depends on the degree of damping/covering) and in addition with option "-Q": 1x output DIRT ACCUMULATION with option "-Qinv": 1x output INVERS DYNAMIC (pnpdark-switching/npn bright-switching) with option "-ANA": 1x output ANALOG (0 ... +10V) when used with connecting cable cab-flb-y or 1x output I-OUT (4 ... 20mA) when used with connecting cable cab-flb-y-4/20	
Sensitivity setting	in 5 steps by means of step switch	
Pulse lengthening	in 5 steps by means of step switch (20 ms ... 300 ms)	
Dirt accumulation display	by means of yellow LED and digital output DIRT ACCUMULATION with type "Q"	
Switching state display	by means of a two-color LED: red: object passes light curtain green: light curtain is free or no change	

Dimensions

FLB-F2-(size):

Size A (mm):

60
80
100
160
200
300

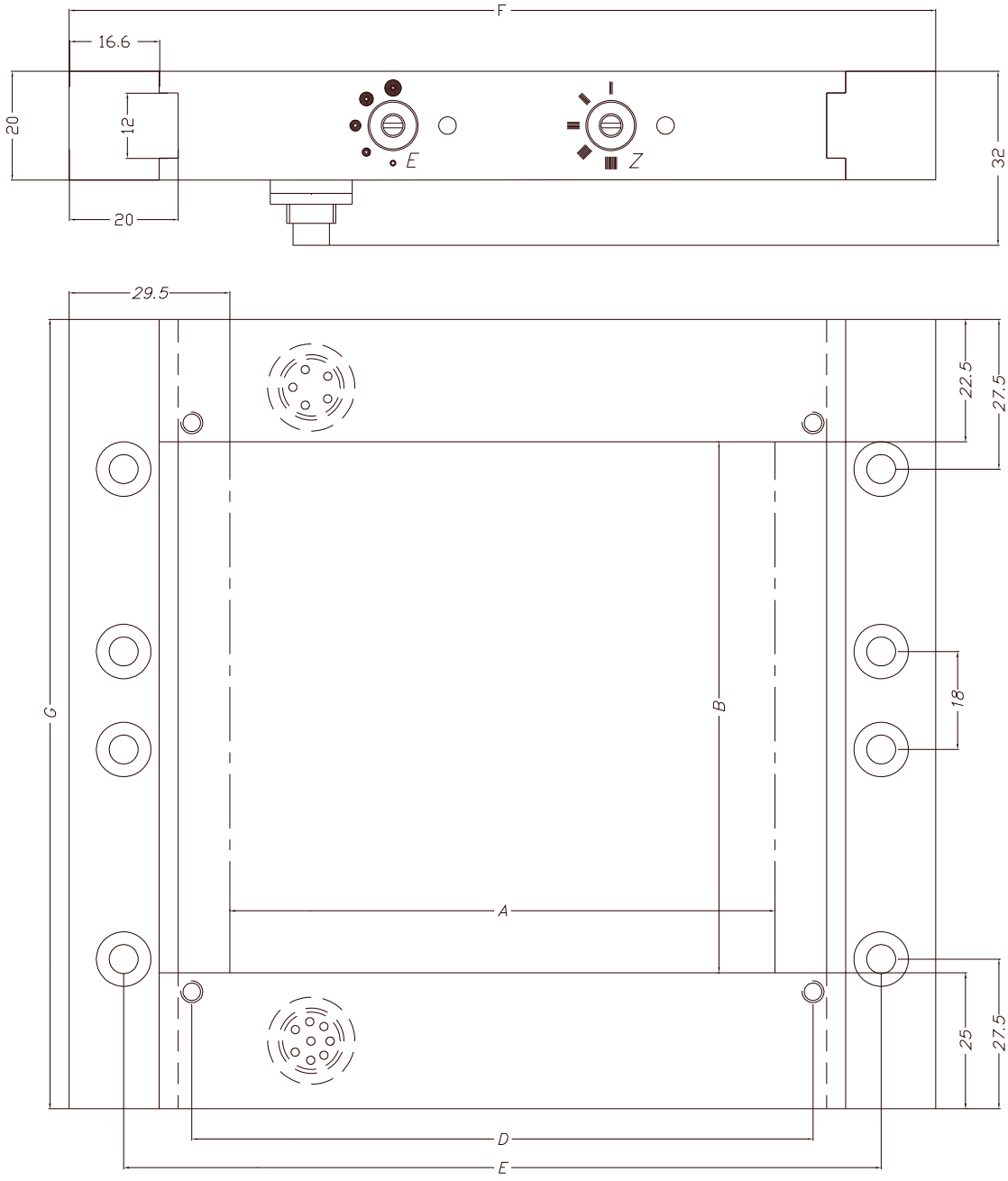

FLB-TRA-(width):

Width B (mm):

60
80
100
155
355
555
755

A	B	C	D	E	F	G
60 80 100 160 200 300	B (FLB-TRA-B)	27.5	A + 14	B + 20	A + 59	B + 47.5

(All dimensions in mm)

Connector Assignment

Connector assignment for FLB-F2:

5-pole connector type 712 (transmitter side)

Pin No.:	Assignment:
1	GND (0V)
2	+24VDC (±10%)
3	F0
4	/F0
5	Window

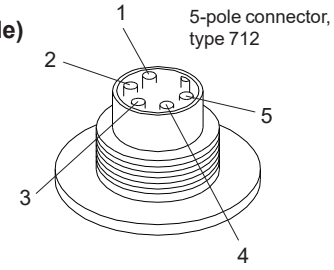

8-pol. Stecker Typ 712 (receiver side)

Pin-No.:	Assignment:
1	GND (0V)
2	+24VDC (±10%)
3	Output DYN
4	Output QSTAT (quasi-static, typ. 10...200s, depends on covering)
5	with "Q": Output DIRT ACCUMULATION with "Qinv": Output INV DYN with "ANA": ANALOG (see below)
6	F0
7	/F0
8	Window

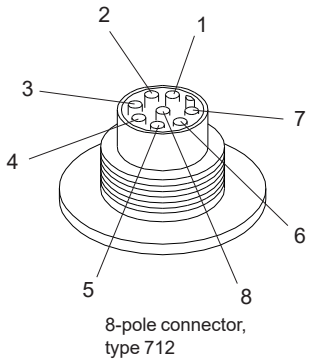

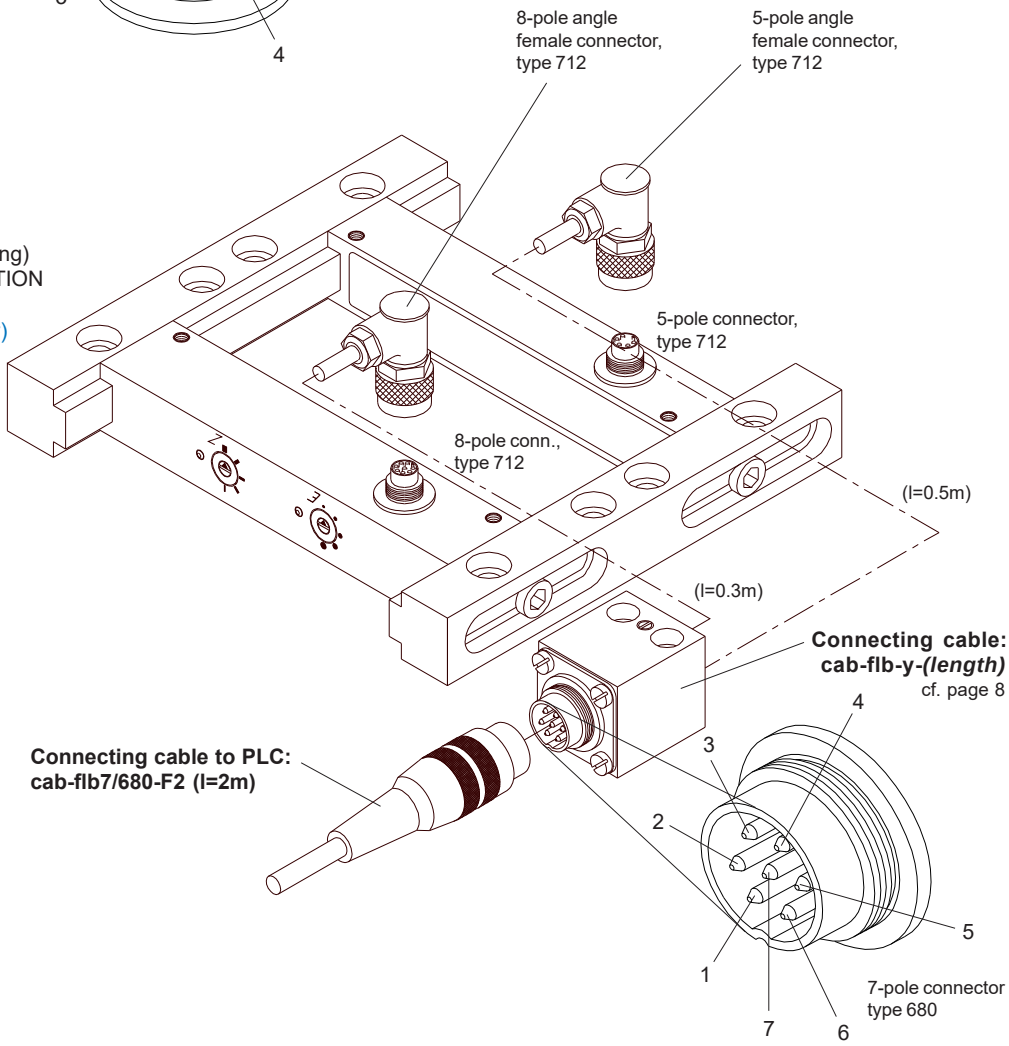

Connecting cable cab-flb7/680-F2-(length):

Pin-No.:	Color:	Assignment:
1	white	Output DYN
2	black	Output QSTAT (quasi-static, typ. 10...200s, depends on covering)
3	grey	with "Q" and cab-flb-y-(length): Output DIRT ACCUMULATION with "Qinv" and cab-flb-y-(length): Output INV DYN with "ANA" and cab-flb-y-(length): ANALOG (0V...+10V)
4	yellow	not connected
5	blue	GND (0V)
6	brown	+24VDC (±10%)
7	green	not connected

Cable available in length:
2m, 3m, 5m

7-pole connector type 680 at the connecting cable cab-flb-y-(length):

Pin-Nr.:	Belegung:
1	Output DYN
2	Output QSTAT (quasi-static, typ. 10...200s, depends on covering)
3	with "Q": Output DIRT ACCUMULATION with "Qinv": Output INV DYN with "ANA": ANALOG (0V...+10V)
4	not connected
5	GND (0V)
6	+24VDC (±10%)
7	not connected

Cable available in length:
0,3m/0,5m, 0,5m, 1m, 2m, 3m (cf. page 8)

Connector Assignment

Special version:
Current output I-OUT (4mA ... 20mA) in connection with standard FLB-F2-...-ANA:

5-pole connector type 712 (transmitter side)

Pin No.:	Assignment:
1	GND (0V)
2	+24VDC (±10%)
3	F0
4	/F0
5	Window

8-pole connector type 712 (receiver side)

Pin No.:	Assignment:
1	GND (0V)
2	+24VDC (±10%)
3	Output DYN
4	Output QSTAT (quasi-static, typ. 10...200s, depends on covering)
5	with "ANA": ANALOG (see below)
6	F0
7	/F0
8	Window

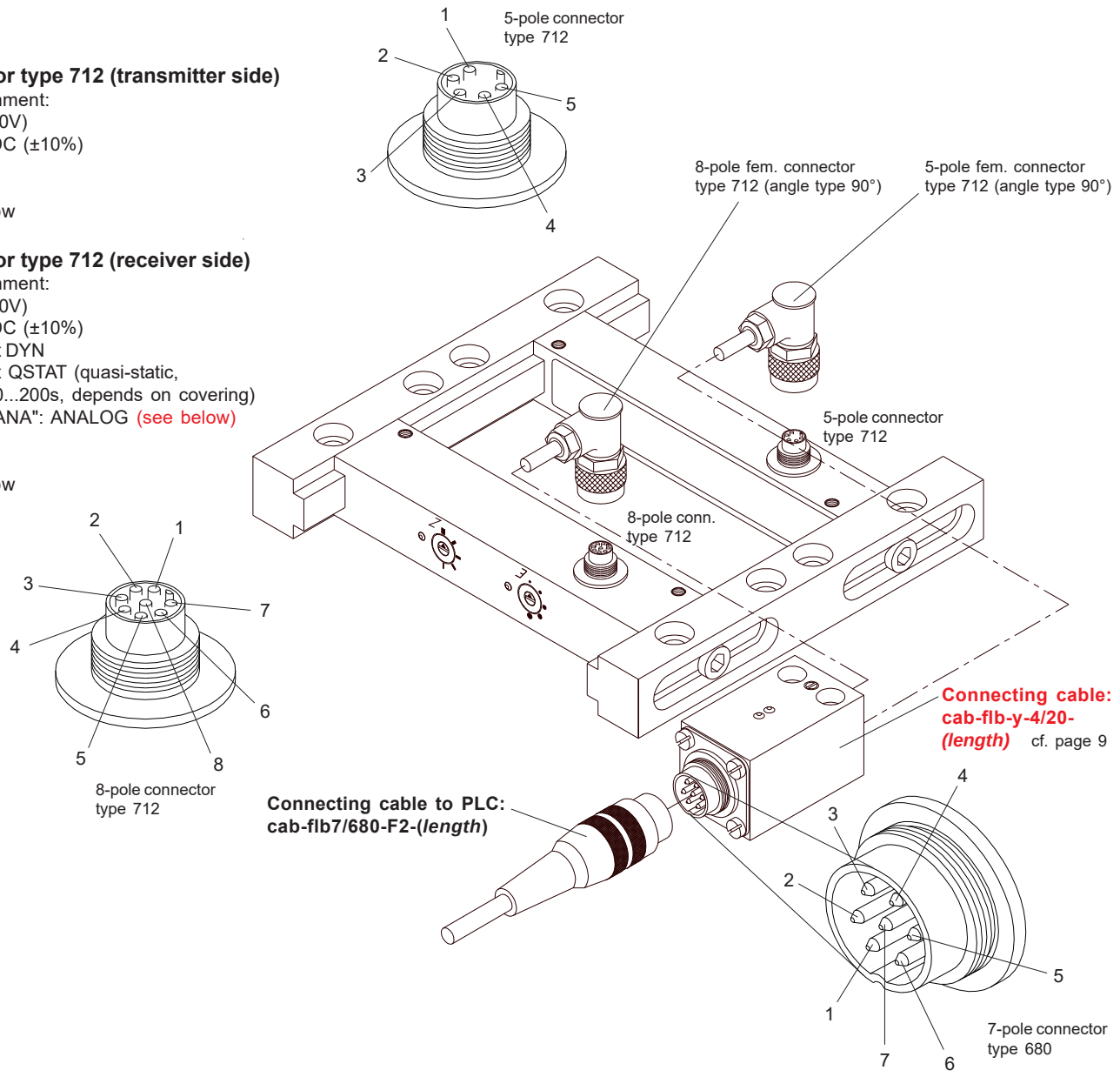

Connecting cable cab-flb7/680-F2-(length):

Pin-No.:	Color:	Assignment:
1	white	Output DYN
2	black	Output QSTAT (quasi-static, typ. 10...200s, depends on covering)
3	grey	with „ANA“ and cab-flb-y-4/20-(length): I-OUT (4mA...20mA)
4	yellow	not connected
5	blue	GND (0V)
6	brown	+24VDC (±10%)
7	green	not connected

Cable available in length:
2m, 3m, 5m

7-pol. connector type 680 at the connecting cable cab-flb-y-4/20-(length):

Pin-No.:	Assignment:
1	Output DYN
2	Output QSTAT (quasi-static, typ. 10...200s, depends on covering)
3	I-OUT (4mA ... 20mA)
4	not connected
5	GND (0V)
6	+24VDC (±10%)
7	not connected

Cable available in length:
1m, 2m, 3m

Setting

Sensitivity setting (step-switch „E“):

Sensitivity can be adjusted by means of a step-switch.
The term ‘sensitivity’ defines the minimum detectable part size.
The sensitivity can be adjusted in 5 steps.

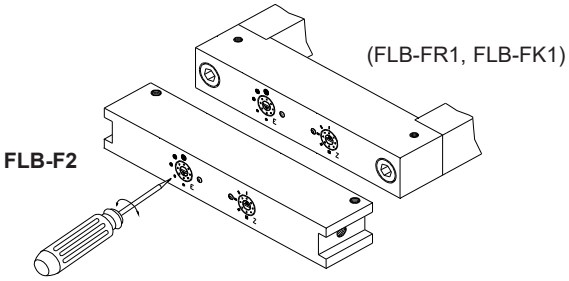

Step	Part size (dyn.)	Part size (stat.)
1	>= 0.5 mm	>= 2 mm
2	>= 0.7 mm	>= 3 mm
3	>= 1.3 mm	>= 5 mm
4	>= 1.7 mm	>= 7 mm
5	>= 2.5 mm	>= 10 mm

Adjustment of pulse lengthening (step-switch „Z“):

The pulse length of the dynamic output can be adjusted by means of a step-switch. 5 pulse lengths are available.

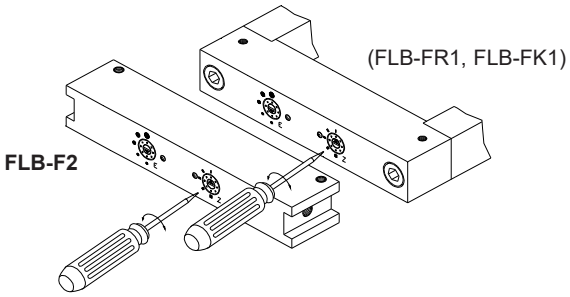

Step	Pulse length
1	300 ms
2	200 ms
3	100 ms
4	50 ms
5	20 ms

Dirt accumulation display (yellow LED):

In addition to a digital dirt accumulation output the user is informed about the dirt accumulation status by means of a yellow LED.
If this yellow LED lights up, the transmitter or receiver side should be checked for dirtying.

(FLB-FR1, FLB-FK1)

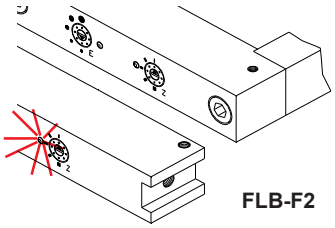

Switching state display (red/green LED):

The switching state is indicated by a red/green LED. In case that a measuring object is detected, the LED changes from GREEN to RED.
The two-color-LED is coupled to the dynamic output, i.e. after pulse end the LED returns to its starting state = GREEN.

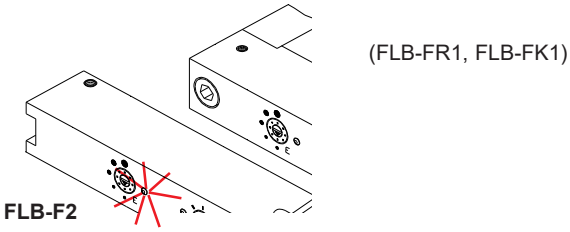

Setting

Adjustment of intensity (step-switch *I*):

With the FLB-F2 type the intensity (IR light output) is adjusted to the respective transmitter/receiver distance by means of a 5-step switch.

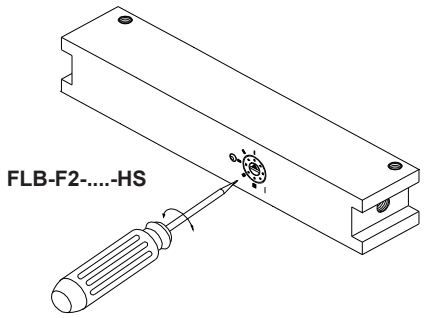

Step	Transmitter/receiver distance
1	<= 15 mm
2	<= 40 mm
3	<= 80 mm
4	<= 150 mm
5	> 150 mm

Connecting Cable

Connecting cable cab-flb-y-...

Available lengths:

cab-flb-y-0,3m/0,5m (l=0,3m/0,5m)
cab-flb-y-0,5m (l=0,5m/0,5m)
cab-flb-y-1m (l=1m/1m)
cab-flb-y-2m (l=2m/2m)
cab-flb-y-3m (l=3m/3m)

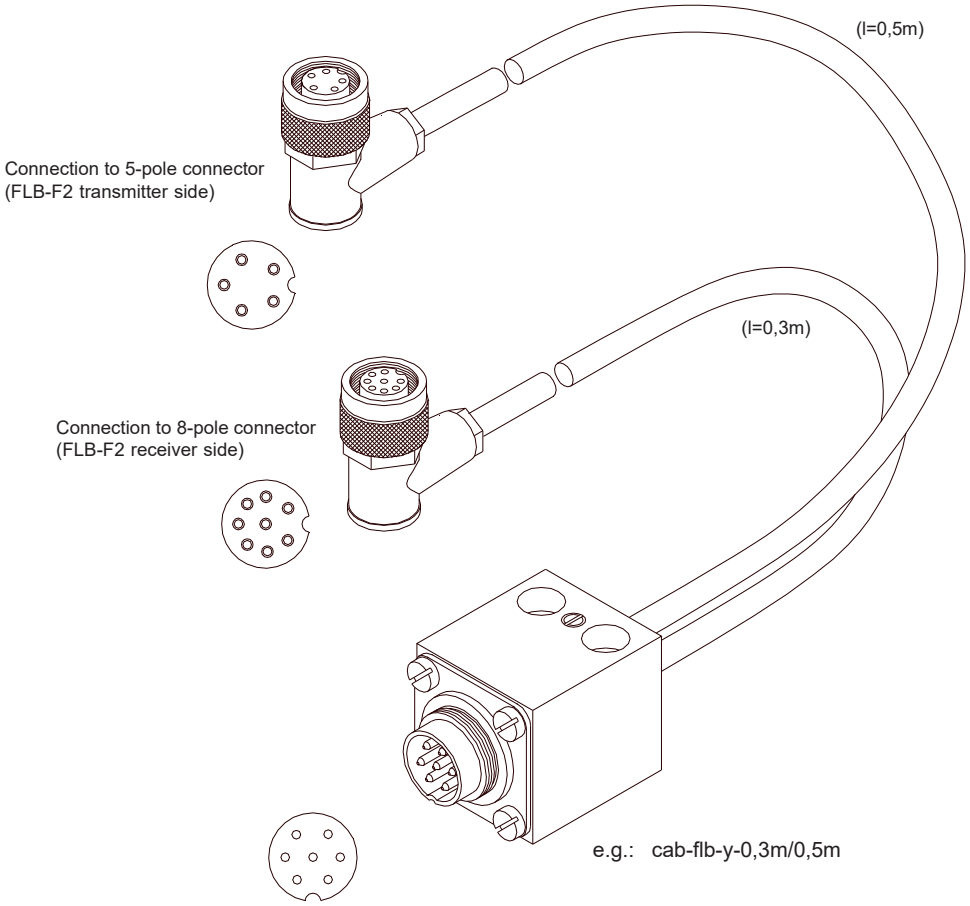

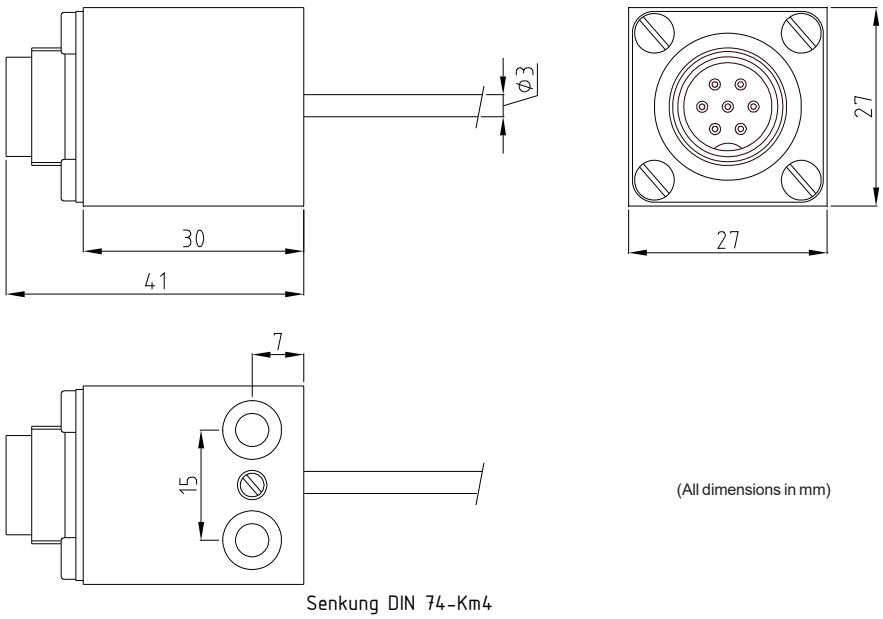

(All dimensions in mm)

Kabel cab-flb-y-4/20

Verbindungskabel cab-flb-y-4/20-*(Länge)*
(geeignet für FLB-F2-...-ANA zum Erhalt eines Stromausgangs 4mA...20mA)

Erhältlich in verschiedenen Längen:

cab-flb-y-4/20-1m (l=1m/1m)
cab-flb-y-4/20-2m (l=2m/2m)
cab-flb-y-4/20-3m (l=3m/3m)

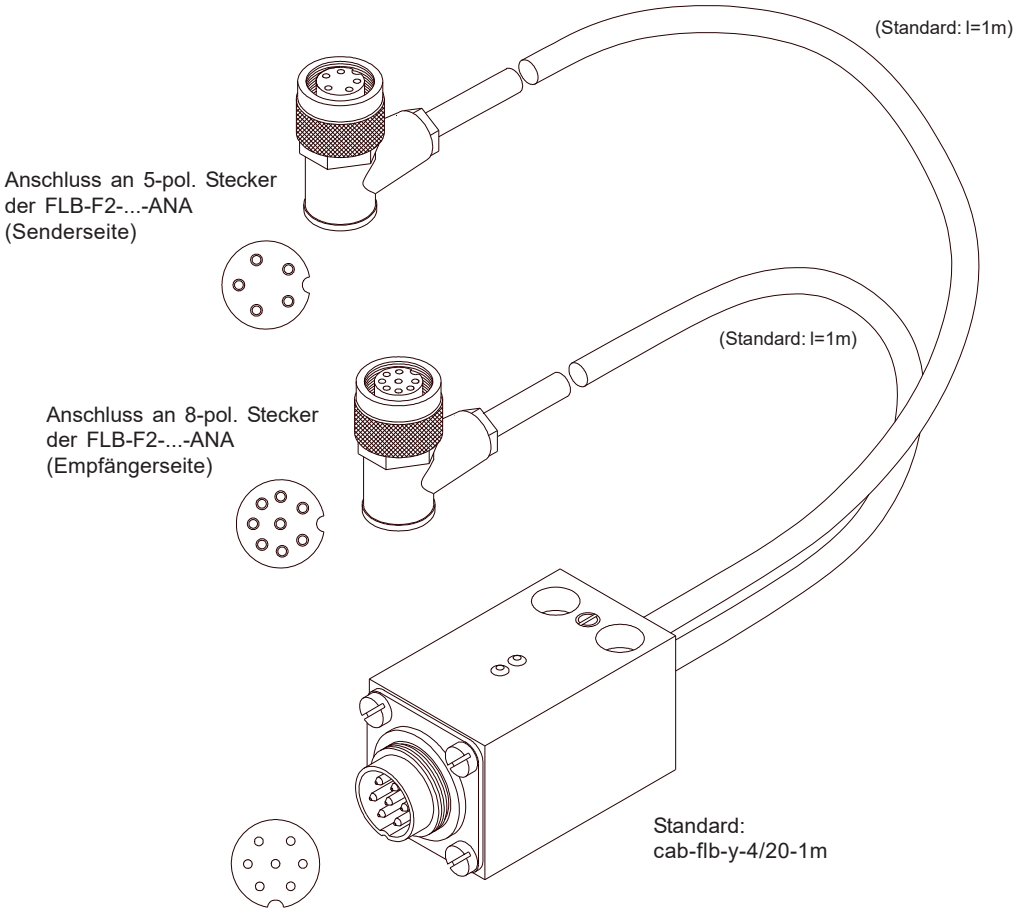

Passendes Anschlusskabel (zur SPS): cab-flb7/680-F2-*(Länge)*

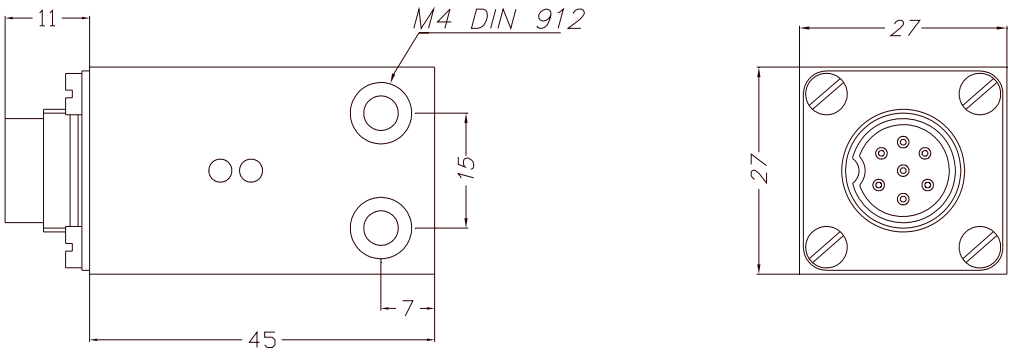

(Alle Abmessungen in mm)

Crossheads

Available crossheads:

FLB-TRA-60	Distance FLB-F2 transmitter/receiver = max. 60 mm (total length crosshead = 105 mm)
FLB-TRA-80	Distance FLB-F2 transmitter/receiver = max. 80 mm (total length crosshead = 125 mm)
FLB-TRA-100	Distance FLB-F2 transmitter/receiver = max. 100 mm (total length crosshead = 145 mm)
FLB-TRA-155	Distance FLB-F2 transmitter/receiver = max. 155 mm (total length crosshead = 205 mm)
FLB-TRA-355	Distance FLB-F2 transmitter/receiver = max. 355 mm (total length crosshead = 400 mm)
FLB-TRA-555	Distance FLB-F2 transmitter/receiver = max. 555 mm (total length crosshead = 600 mm)
FLB-TRA-755	Distance FLB-F2 transmitter/receiver = max. 755 mm (total length crosshead = 800 mm)

FLB-TRA-60

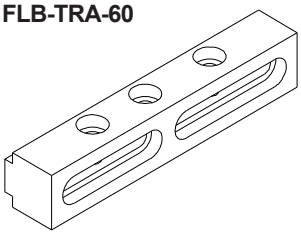

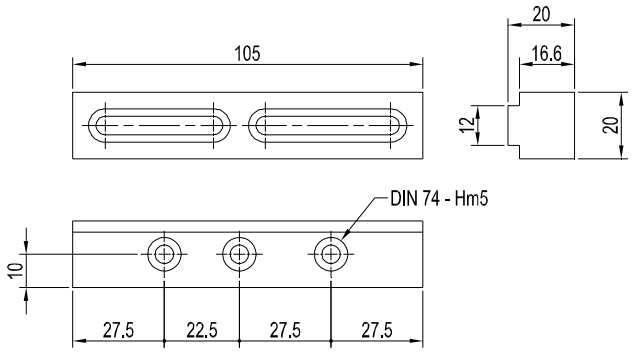

FLB-TRA-80

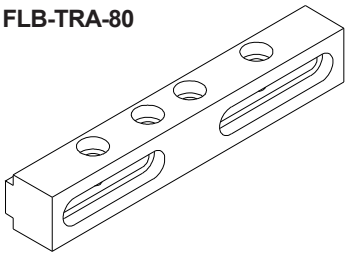

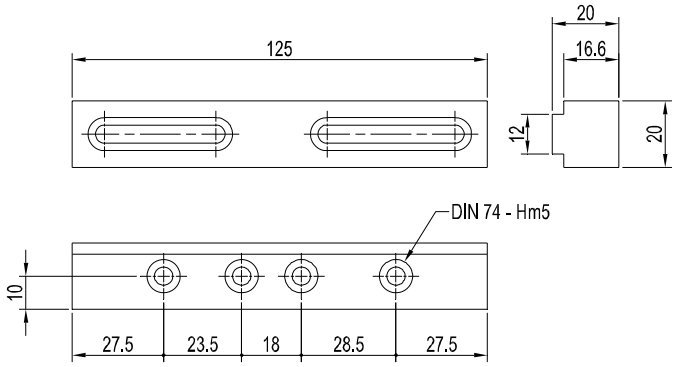

FLB-TRA-100

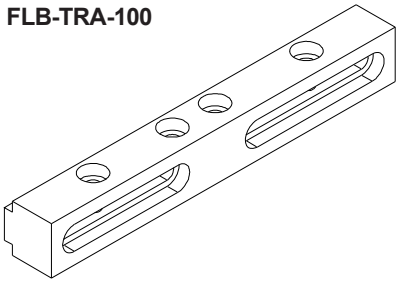

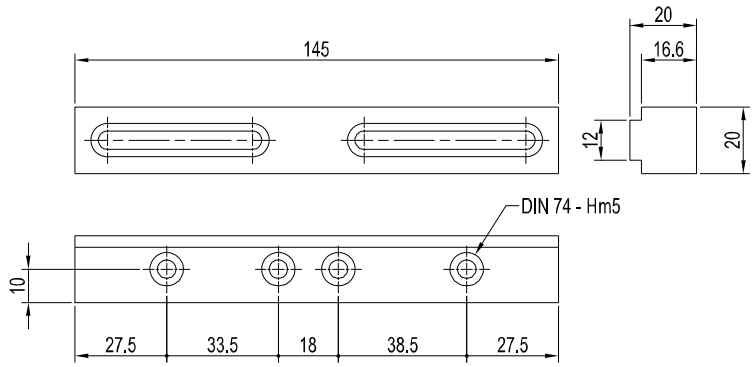

(All dimensions in mm)

Crossheads

FLB-TRA-155
FLB-TRA-355

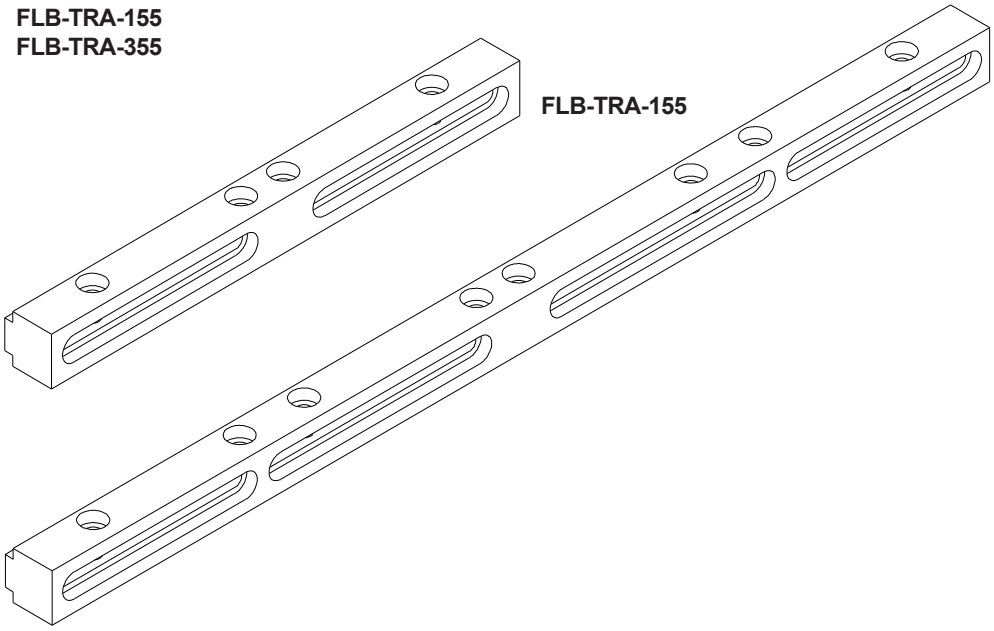

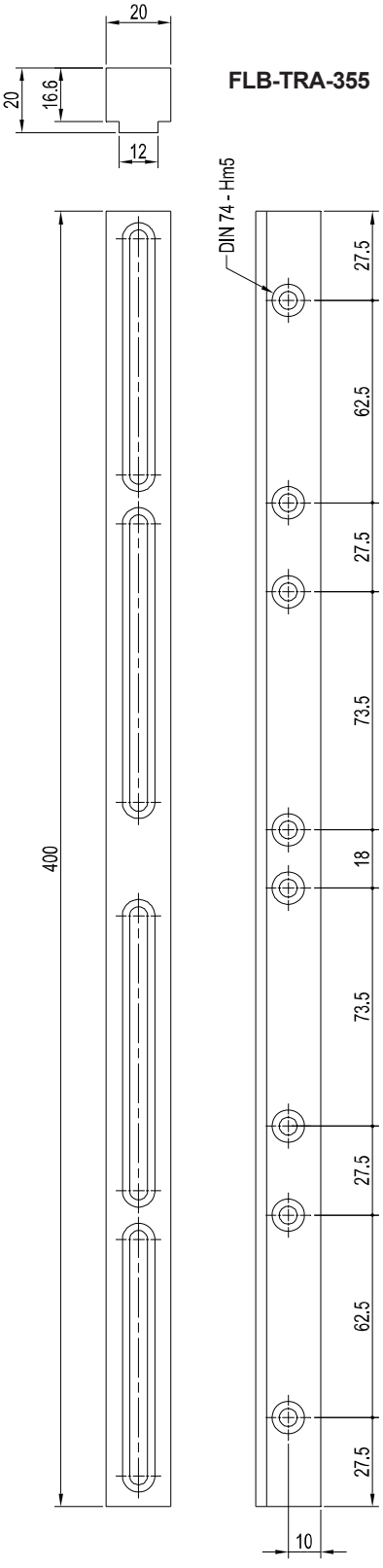

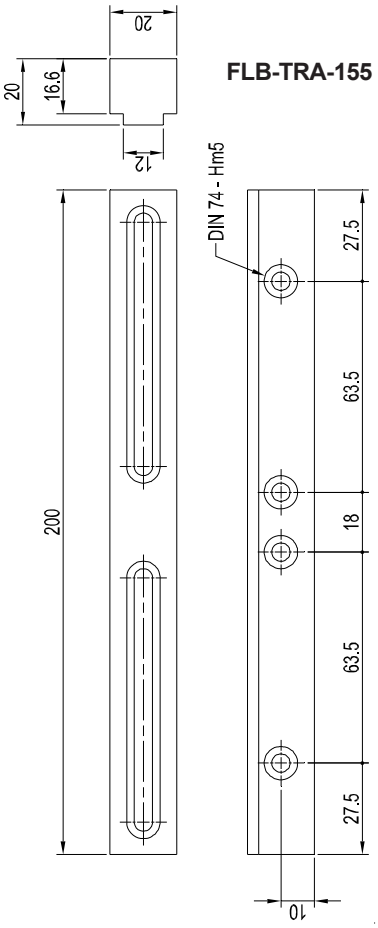

(All dimensions in mm)

Crossheads

FLB-TRA-555

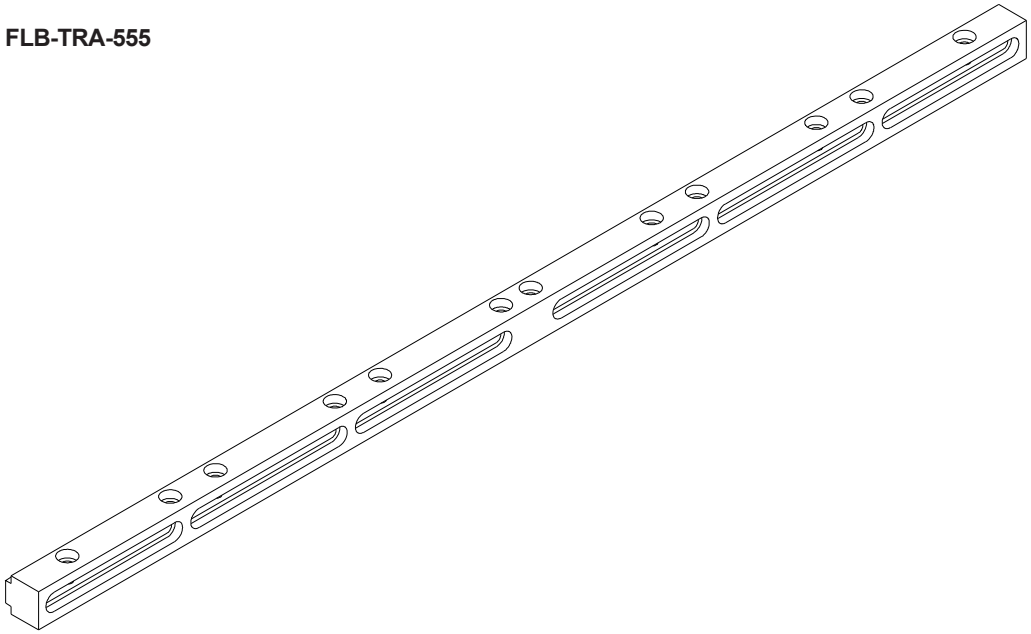

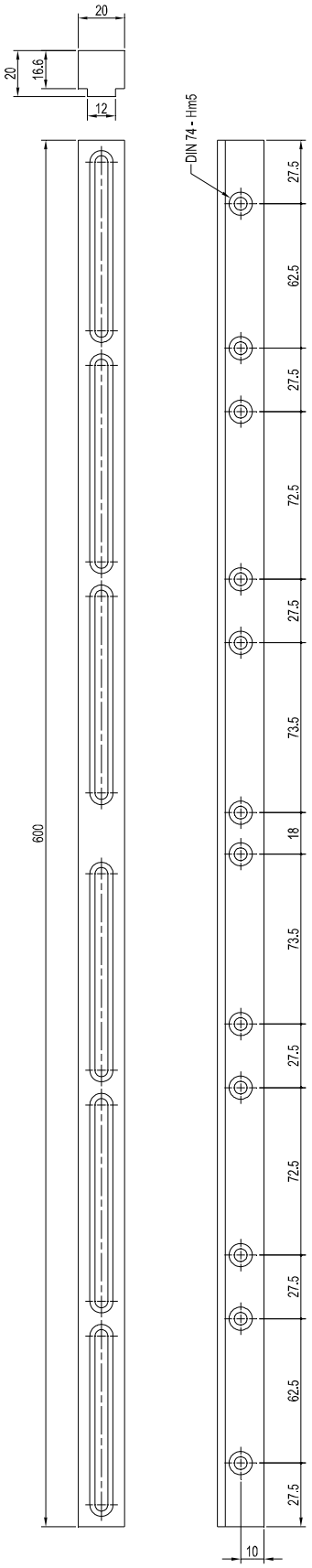

(All dimensions in mm)

Crossheads

FLB-TRA-755

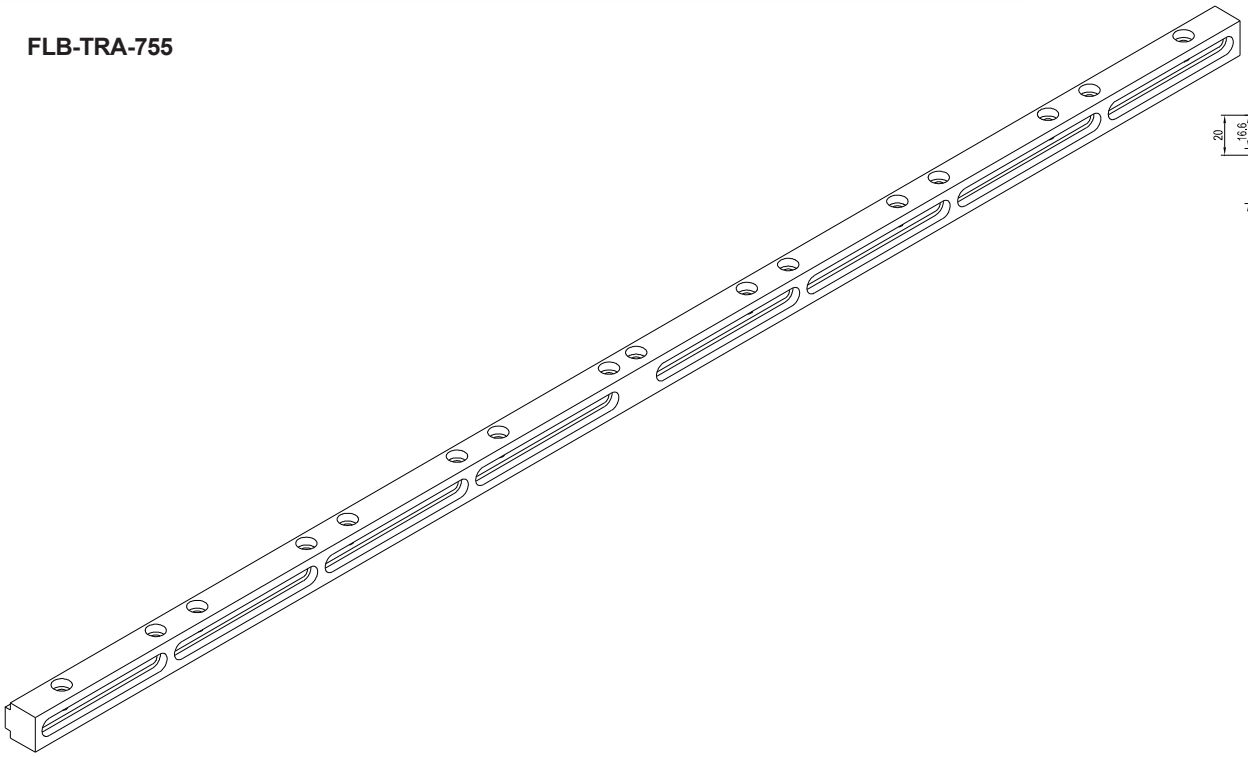

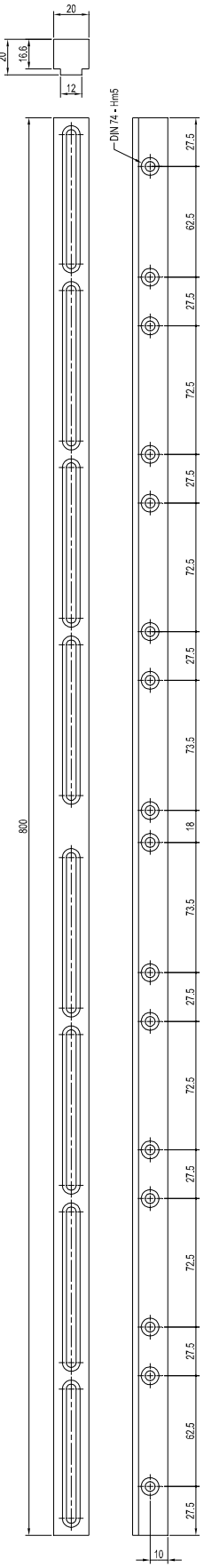

(All dimensions in mm)