FLB Series

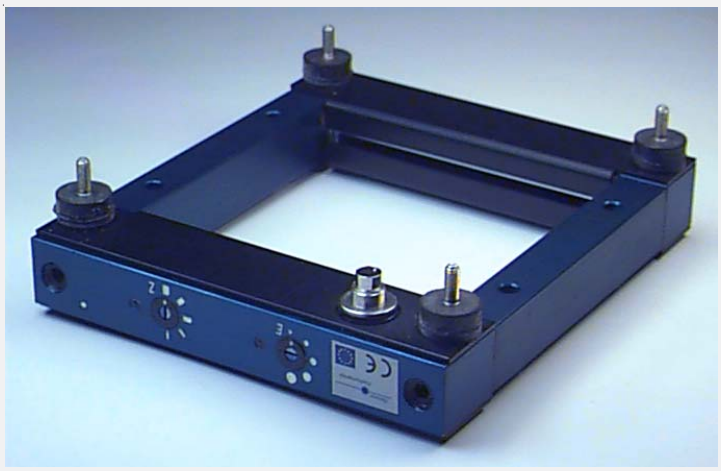

FLB-FR1-...

- Integrated electronics
- High sensitivity (adjustable via 5-step-switch)
- Pulse length adjustable via 5-step-switch
- Dynamic and static output
- Analog output (0V ... +10V)
- Switching state indication by means of red/green LED
- Dirt accumulation indication by means of yellow LED
- Various frame sizes available (light curtain 60 mm ... 300 mm)
- Optics mechanically protected by means of baffle plate
- Sturdy aluminum housing

Design

Product name:

FLB-FR1-(frame size A/B)*-Q
FLB-FR1-(frame size A/B)*-Qinv
FLB-FR1-(frame size A/B)*-Q-ANA
FLB-FR1-(frame size A/B)*-Qinv-ANA

Q = Switching output:
PNP bright-switching (PNP n.c.)
NPN dark-switching (NPN n.o.)

Qinv = Additional switching output:
PNP dark-switching (PNP n.o.)
NPN bright-switching (NPN n.c.)

ANA = Additional analog output
(0V ... +10V)

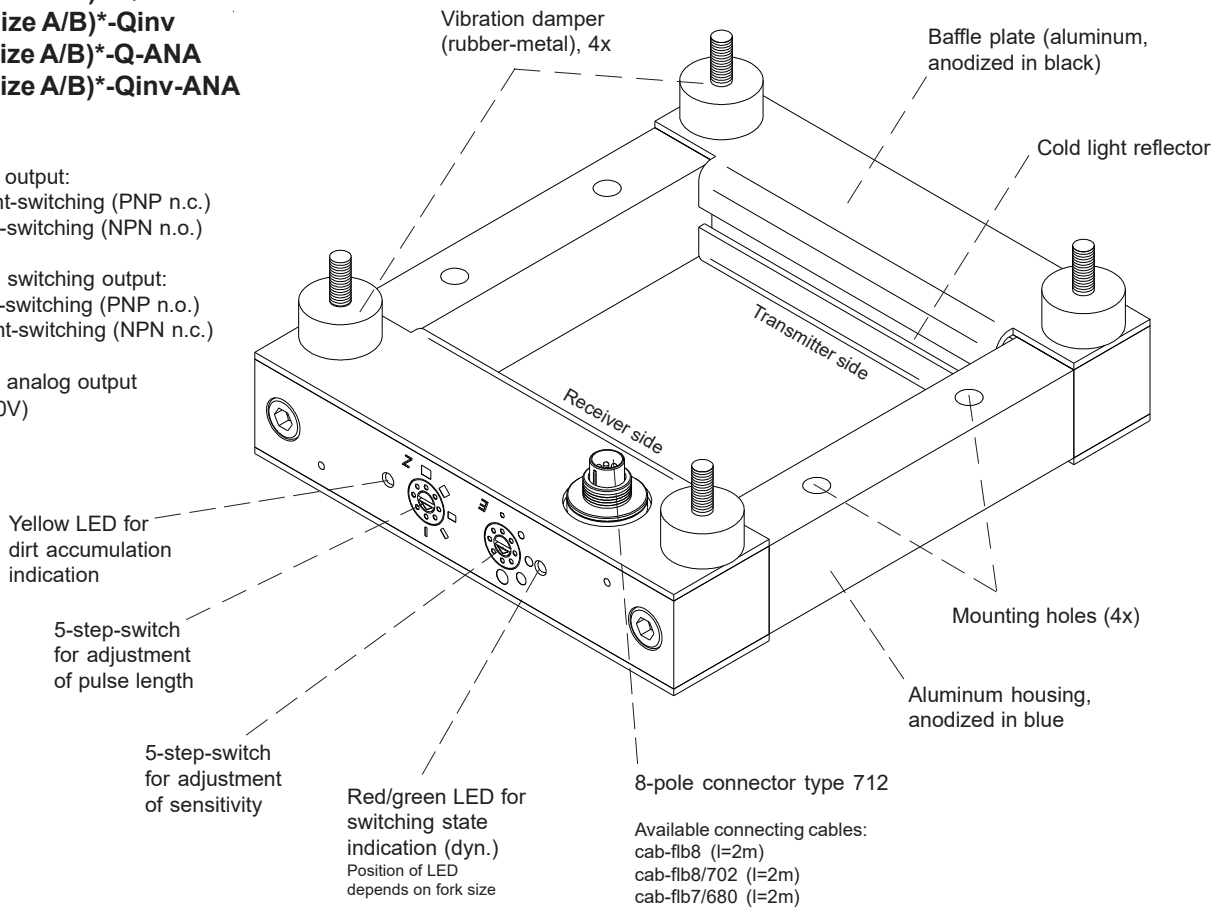



***Available frame sizes (A/B):**
(please cf. pages 4 and 5: „dimensions“)

A = 60 / 80 / 100 / 160 / 200 / 300 mm (width of cold light reflector)
B = 60 / 80 / 100 / 160 / 200 / 300 mm (distance between transmitter and receiver)

(any „A“ can be combined with any „B“)

Technical Data

Model	**FLB-FR1-...**	
Max. transmitter/ receiver distance	300 mm	
Min. detectable object	with dim. A = 60, 80, 100 mm: typ. 0.3 mm with dim. A = 160 mm: typ. 0.5 mm with dim. A = 200 mm: typ. 0.7 mm with dim. A = 300 mm: typ. 1.0 mm	
Analog output (0V ... +10V)	optional	
Optical filter	Cold-light reflector	
Light type	Infrared	
Voltage supply	+12VDC ... +32VDC, protected against polarity reversal, overload protected	
Pulsating light operation	approx. 5 kHz	
Ambient light	up to 5000 Lux	
Type of protection	IP67	
Current consumption	200 mA	
EMC test acc. to	DIN EN 60947-5-2 CE	
Connector type	8-pole connector, Binder series 712	
Operating temperature range	-20°C ... +60°C	
Storage temperature range	-20°C ... +85°C	
Housing	Aluminum, anodized in blue	
Max. switching current	200 mA, short-circuit-proof	
Switching frequency	typ. 1 kHz	
Outputs	All types:	1x QUASI STATIC (typ. 10....200s, depends on degree of covering of optics) 1x DIRT ACCUMULATION
	additionally for type "Q":	1x DYNAMIC (pnp bright-switching = pnp n.c. / npn dark-switching = npn n.o.)
	for type "Qinv":	1x DYNAMISCH (pnp bright-switching = pnp n.c. / npn dark-switching = npn n.o.) 1x INVERS DYNAMIC (pnp dark-switching/ = pnp n.o. / npn bright-switching = npn n.c.)
	for type "Q-ANA":	1x DYNAMIC (pnp bright-switching = pnp n.c. / npn dark-switching = npn n.o.) 1x ANALOG (0V...+10V)
	for type "Qinv-ANA":	1x INVERS DYNAMIC (pnp dark-switching/ = pnp n.o. / npn bright-switching = npn n.c.) 1x ANALOG (0V...+10V)
Sensitivity setting	in 5 steps by means of step switch	
Pulse lengthening	in 5 steps by means of step switch (20 ms ... 300 ms)	
Dirt accumulation display	By means of yellow LED and digital DIRT ACCUMULATION output	
Switching state display	By means of bi-color LED: RED (object passes light curtain) / GREEN (light curtain free, or no change)	

Design

FLB-FR1-(A/B)
for A = 60 mm ... 100 mm

Frame size A/B (in mm):

60/...
80/...
100/...

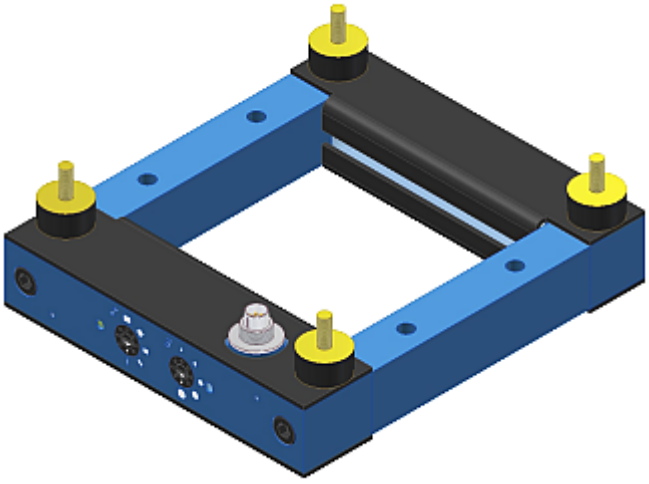

FLB-FR1-(A/B)
for A = 160 mm ... 300 mm

Frame size A/B (in mm):

160/...
200/...
300/...

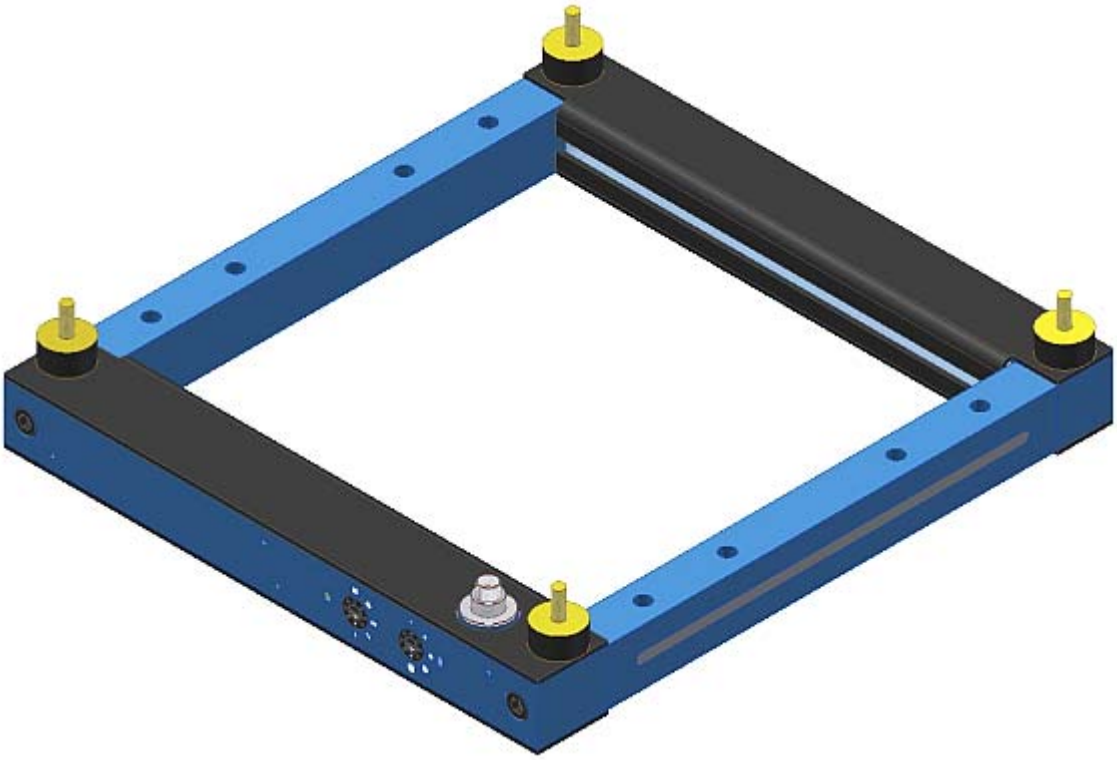

Dimensions

FLB-FR1-(A/B)
f0r A = 60 mm ... 100 mm

Fork size A/B (in mm):

60/60
60/80
60/100
60/160
60/200
60/300

80/60
80/80
80/100
80/160
80/200
80/300

100/60
100/80
100/100
100/160
100/200
100/300

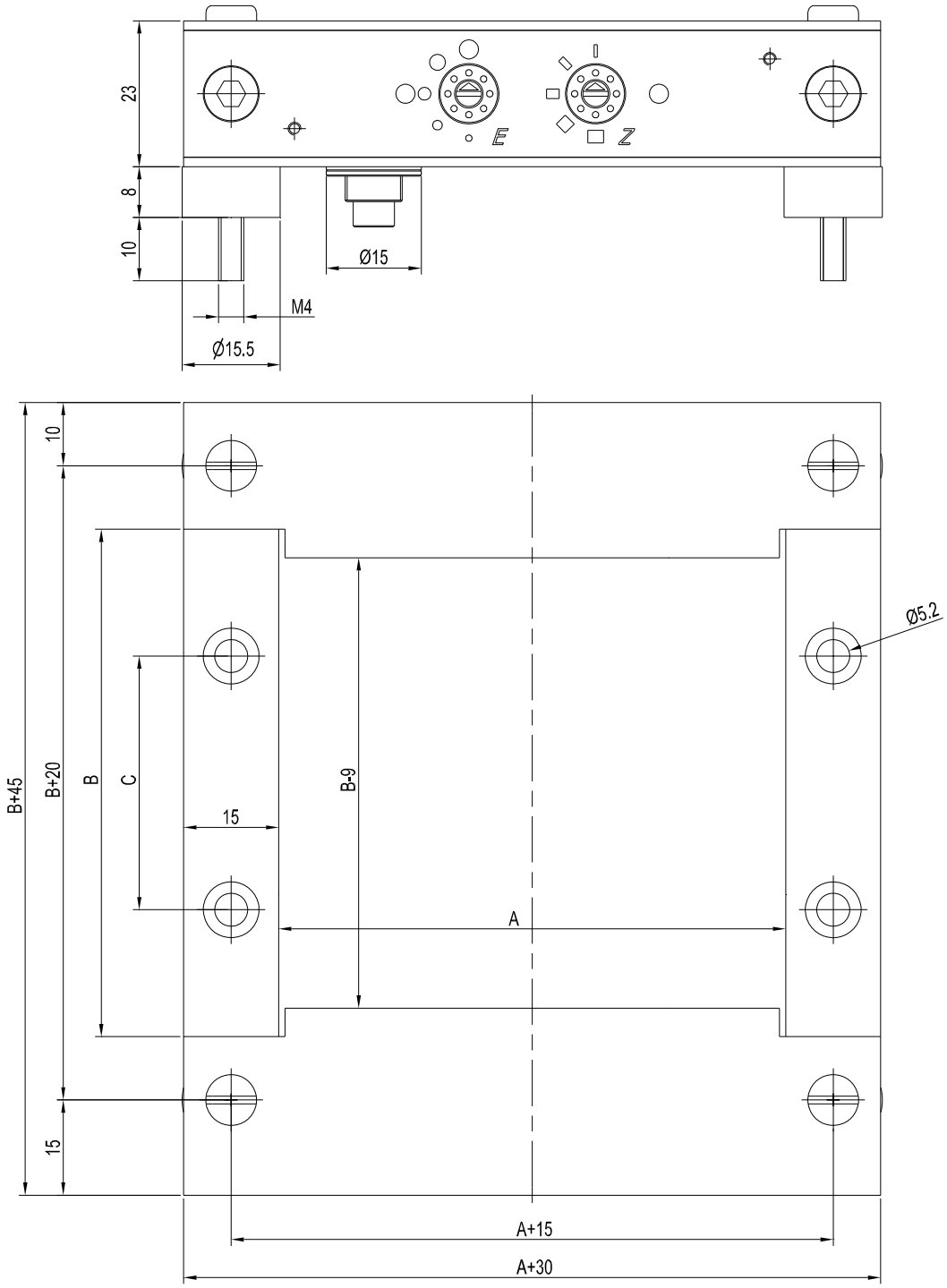

	A	B	C	
Size 60	60	60	20	mm
Size 80	80	80	40	mm
Size 100	100	100	60	mm

(All dimensions in mm)

Dimensions

FLB-FR1-(A/B)
for A = 160 mm ... 300 mm

Fork size A/B (in mm):

160/60
160/80
160/100
160/160
160/200
160/300

200/60
200/80
200/100
200/160
200/200
200/300

300/60
300/80
300/100
300/160
300/200
300/300

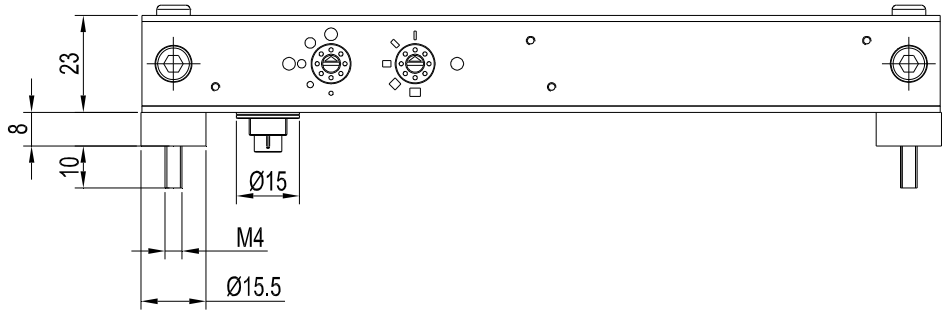

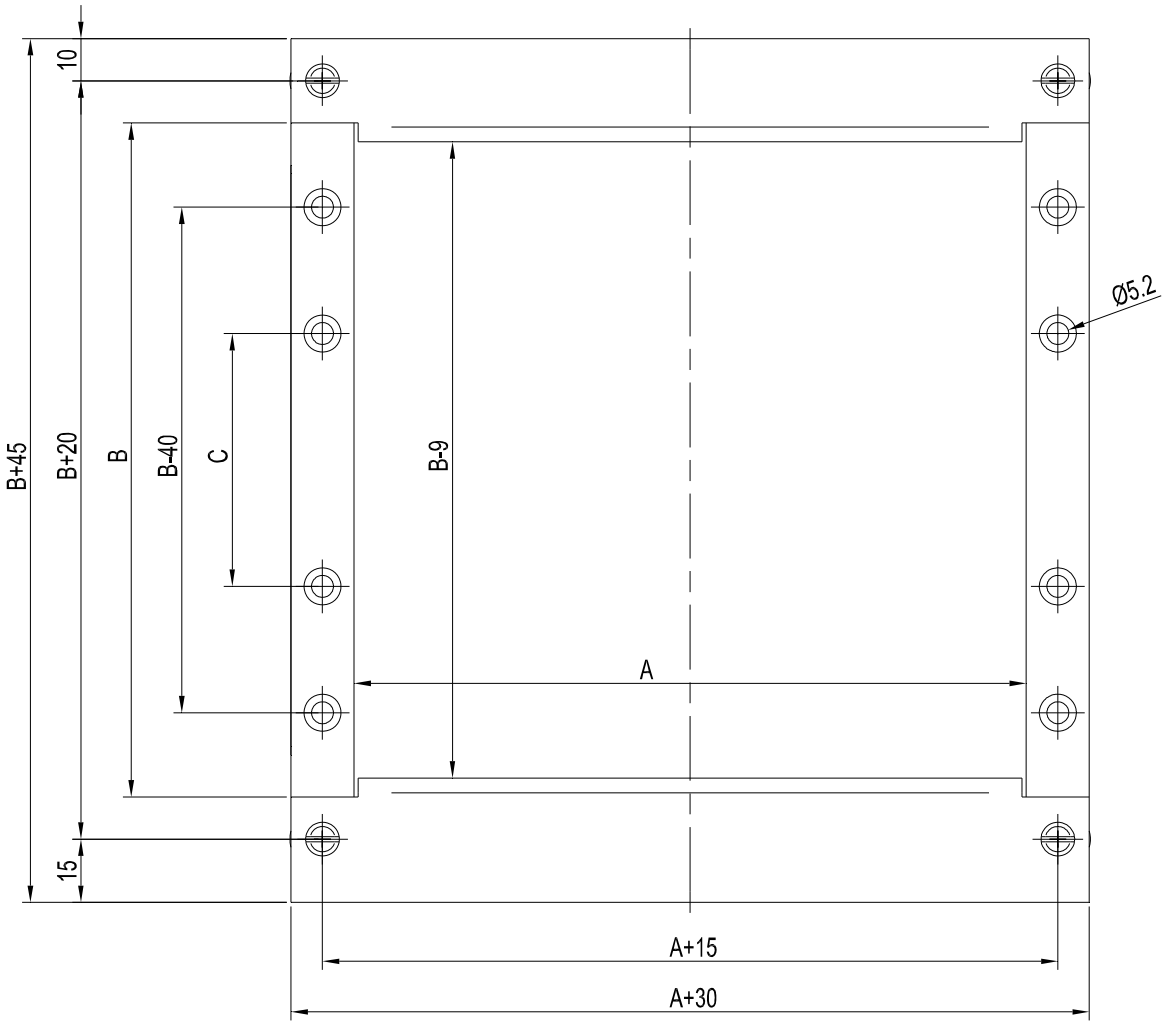

	A	B	C	
Size 160	160	160	60	mm
Size 200	200	200	60	mm
Size 300	300	300	80	mm

(All dimensions in mm)

Connector Assignment

Connector assignment FLB-FR1:

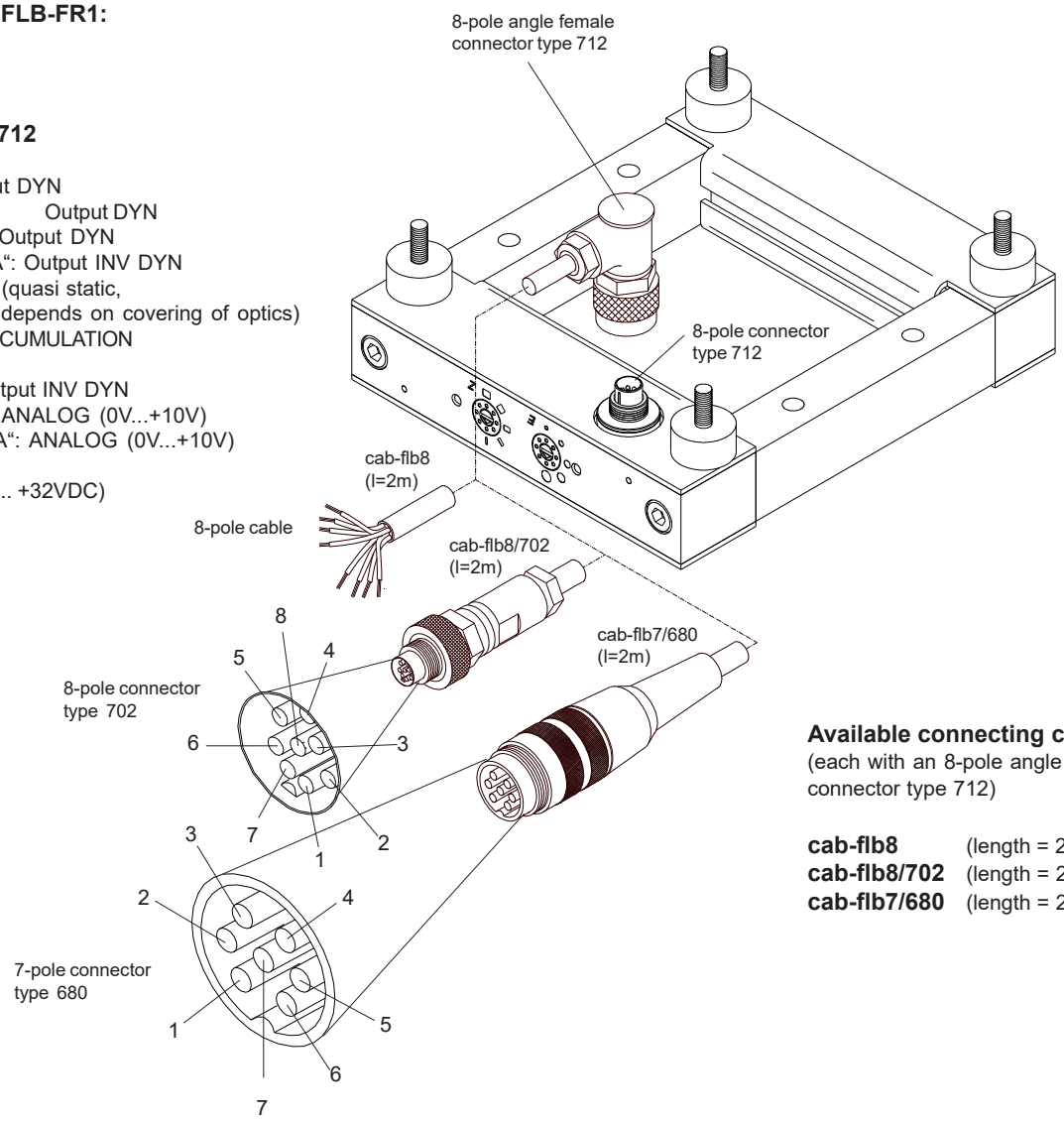

8-pole connector type 712

Pin No.:	Assignment:
1	with „Q“: Output DYN with „Qinv“: Output DYN with „Q-ANA“: Output DYN with „Qinv-ANA“: Output INV DYN
2	Output QSTAT (quasi static, typ. 10...200s, depends on covering of optics)
3	Output DIRT ACCUMULATION
4	with "Q": n.c. with "Qinv": Output INV DYN with "Q-ANA": ANALOG (0V...+10V) with „Qinv-ANA“: ANALOG (0V...+10V)
5	GND (0V)
6	+Ub (+12VDC ... +32VDC)
7	not connected
8	not connected

Available connecting cables:
(each with an 8-pole angle female connector type 712)

cab-flb8 (length = 2m)
cab-flb8/702 (length = 2m)
cab-flb7/680 (length = 2m)

Connecting cable cab-flb7/680

Pin No.:	Assignment:	Color:
1	with "Q": Output DYN with "Qinv": Output DYN with "Q-ANA": Output DYN with „Qinv-ANA“: Output INV DYN	white
2	Output QSTAT (quasi static, typ. 10...200s, depends on covering)	black
3	Output DIRT ACCUMULATION	grey
4	with "Q": n.c. with "Qinv": Output INV DYN with "Q-ANA": ANALOG (0V...10V) with „Qinv-ANA“: ANALOG (0V...10V)	yellow
5	GND (0V)	blue
6	+Ub (+12VDC ... +32VDC)	brown
7	not connected	green

Connecting cable cab-flb8 or cab-flb8/702

Pin No.:	Assignment:	Color:
1	with "Q": Output DYN with "Qinv": Output DYN with "Q-ANA": Output DYN with „Qinv-ANA“: Output INV DYN	white
2	Output QSTAT (quasi static, typ. 10...200s, depends on covering)	black
3	Output DIRT ACCUMULATION	grey
4	with "Q": n.c. with "Qinv": Output INV DYN with "Q-ANA": ANALOG (0V...10V) with „Qinv-ANA“: ANALOG (0V...10V)	yellow
5	GND (0V)	blue
6	+Ub (+12VDC ... +32VDC)	brown
7	not connected	green
8	not connected	

Setting

Sensitivity setting (step-switch „E“):

Sensitivity can be adjusted by means of a step-switch.
The term ‘sensitivity’ defines the minimum detectable part size.
The sensitivity can be adjusted in 5 steps.

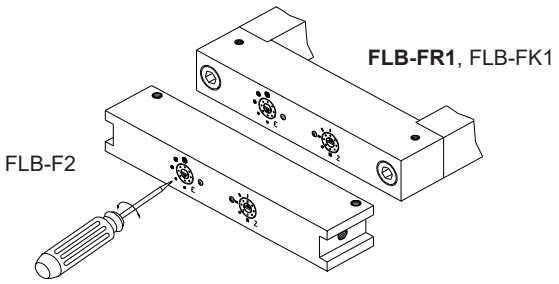

Step	Part size (dyn.)	Part size (stat.)
1	>= 0.5 mm	>= 2 mm
2	>= 0.7 mm	>= 3 mm
3	>= 1.3 mm	>= 5 mm
4	>= 1.7 mm	>= 7 mm
5	>= 2.5 mm	>= 10 mm

Adjustment of pulse lengthening (step-switch „Z“):

The pulse length of the dynamic output can be adjusted by means of a step-switch. 5 pulse lengths are available.

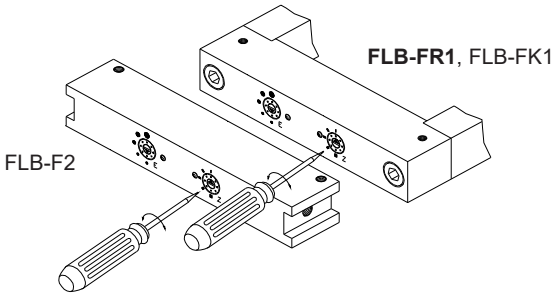

Step	Pulse length
1	300 ms
2	200 ms
3	100 ms
4	50 ms
5	20 ms

Dirt accumulation display (yellow LED):

In addition to a digital dirt accumulation output the user is informed about the dirt accumulation status by means of a yellow LED.
If this yellow LED lights up, the transmitter or receiver side should be checked for dirtying.

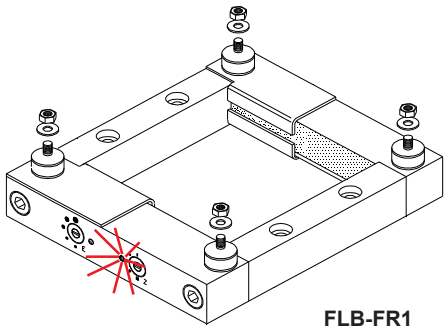

FLB-FR1

Switching state display (red/green LED):

The switching state is indicated by a red/green LED. In case that a measuring object is detected, the LED changes from GREEN to RED.
The two-color-LED is coupled to the dynamic output, i.e. after pulse end the LED returns to its starting state = GREEN.

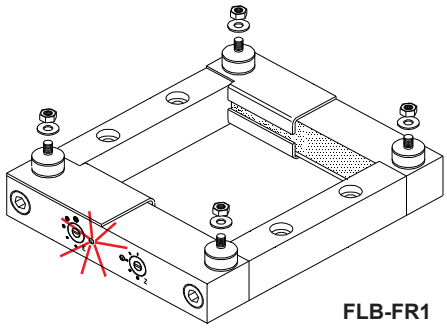

FLB-FR1